MC series

Counterbalanced stacker

1,000kg / 1,250kg / 1,500kg

- Servo power steering
- Dual-Combi MOSFET
- Yale AC Technology
- AC drive motor
- 24V/300 - 400 Ah battery
- Rider or pedestrian operation

Truck Dimensions

Ast = Wa + R + a

$$R = \sqrt{(l_6 + x)^2 + \left(\frac{b_{12}}{2}\right)^2}$$

a = 200
l_6 = Load length

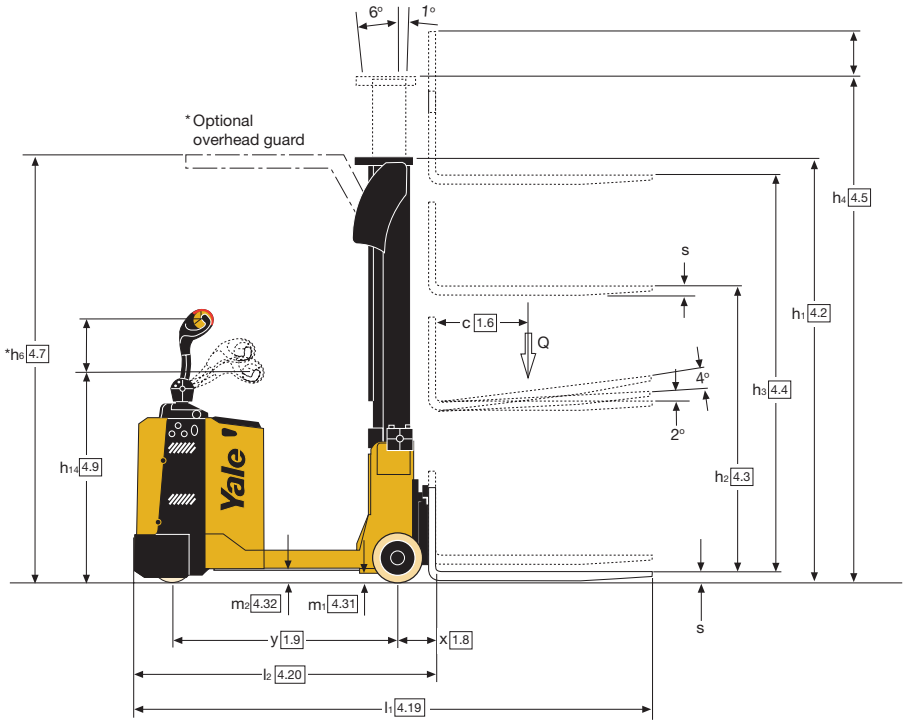

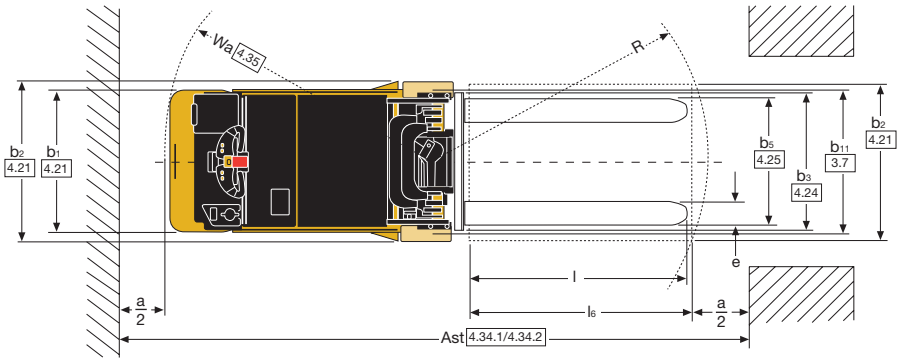

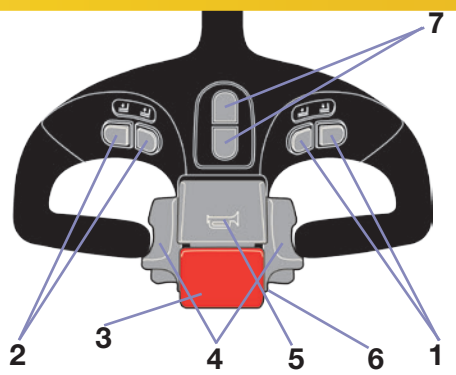

1 Forks lift-lowering (proportional buttons)
2 Side shift buttons
3 Travel direction inverter button
4 Butterfly direction and speed control buttons
5 Horn
6 Creep speed
7 Tilt buttons

Mast dimensions

Mast type	h_1 (mm)	h_2 (mm)	h_3 (mm)	h_4 (mm)	h_6 (mm) (opt.)
2 stage	2075	100	2972	3547	2312
	2275	100	3372	4147	2362
	2425	100	3672	4597	2412
	2625	100	4072	5197	2612
3 stage	2125	1555	4626	5201	2312
	2275	1705	5076	5651	2312
	2425**	1855**	5526**	6101**	2412**

** subject to application and engineering validation.

VDI 2198 – General Specifications

Distinguishing mark	1.1	Manufacturer (abbreviation)		Yale	Yale	Yale	Yale	Yale
	1.2	Manufacturer's type designition		**MC10**	**MC12**	**MC15**	**MC10**	**MC12**
	1.3	Drive: electric (battery or mains), diesel, petrol, fuel gas		Battery	Battery	Battery	Battery	Battery
	1.4	Operator type: hand, pedestrian, standing, seated, order-picker		Pedestrian	Pedestrian	Pedestrian	Stand on	Stand on
	1.5	Rated capacity/rated load	Q (kg)	1000	1200	1500	1000	1200
	1.6	Load centre distance	c (mm)	500	500	500	500	500
	1.7	Load distance, centre of drive axle to fork	x (mm)	211	211	211	211	211
	1.9	Wheelbase	y (mm)	1300	1450	1600	1300	1450
Weights	2.1	Service weight	kg	2180	2280	2230	2210	2310
	2.2	Axle loading, laden front/rear	kg	2660 / 520	2935 / 545	3345 / 385	2680 / 630	2955 / 555
	2.3	Axle loading, unladen front/rear	kg	1175 / 1005	1285 / 985	1420 / 940	1195 / 1015	1315 / 995
Tyres/chassis	3.1	Tyres: P=pneumatic, V=cushion, SE=superelastic		Vulkollan/Vulkollan	Vulkollan/Vulkollan	Vulkollan/Vulkollan	Vulkollan/Vulkollan	Vulkollan/Vulkollan
	3.2	Tyre size, front		ø 254 x 125	ø 254 x 125	ø 254 x 125	ø 254 x 125	ø 254 x 125
	3.3	Tyre size, rear		ø 200 x 100	ø 200 x 100	ø 200 x 100	ø 200 x 100	ø 200 x 100
	3.5	Wheels, number front/rear (x = driven wheels)		1 x /2	1 x /2	1 x /2	1 x /2	1 x /2
	3.7	Tread, rear	b_{11} (mm)	839	839	839	839	839
Dimensions	4.1	Tilt of mast/fork carriage forward/backward	α / β (º)	+ 2 / - 4	+ 2 / - 4	+ 2 / - 4	+ 2 / - 4	+ 2 / - 4
	4.2	Height, mast lowered	h_1 (mm)	See Table	See Table	See Table	See Table	See Table
	4.3	Free lift	h_2 (mm)	See Table	See Table	See Table	See Table	See Table
	4.4	Lift	h_3 (mm)	See Table	See Table	See Table	See Table	See Table
	4.5	Height, mast extended	h_4 (mm)	See Table	See Table	See Table	See Table	See Table
	4.7	Height of overhead guard (cabin)	h_6 (mm)	-	-	-	See Table	See Table
	4.9	Height drawbar in driving position min./max.	h_{14} (mm)	1180 / 1530	1180 / 1530	1180 / 1530	1220 / 1570	1220 / 1570
	4.15	Height, lowered	h_{13} (mm)	35	35	35	35	35
	4.19	Overall length	l_1 (mm)	2742	2892	3042	2742	2892
	4.20	Length to face of forks	l_2 (mm)	1742	1892	2042	1742	1892
	4.21	Overall width	b_1/b_2 (mm)	788 / 939	788 / 939	788 / 939	788 / 939	788 / 939
	4.22	Fork dimensions DIN ISO 2331	s/e/l (mm)	35 / 100 / 1000	35 / 100 / 1000	35 / 100 / 1000	35 / 100 / 1000	35 / 100 / 1000
	4.23	Fork carriage ISO 2328, class/type A, B		2 / A	2 / A	2 / A	2 / A	2 / A
	4.24	Fork carriage width	b_3 (mm)	700	700	700	700	700
	4.25	Distance between fork-arms	m_1 (mm)	240 / 672	240 / 672	240 / 672	240 / 672	240 / 672
	4.31	Ground clearance, laden, below mast	m_2 (mm)	59	59	59	59	59
	4.32	Ground clearance, centre of wheelbase	A_{st} (mm)	76	76	76	76	76
	4.34.1	Aisle width for pallets 1000 × 1200 crossways	A_{st} (mm)	3111	3258	3406	3111	3258
	4.34.2	Aisle width for pallets 800 × 1200 lengthways	W_a (mm)	3227	3374	3522	3227	3374
	4.35	Turning radius	km/h	1560	1707	1855	1560	1707
Performance data	5.1	Travel speed, laden/unladen	m/s	4.8 / 5	4.8 / 5	4.8 / 5	5.5 / 6	5.5 / 6
	5.2	Lift speed, laden/unladen	m/s	0.26 / 0.28	0.20 / 0.28	0.18 / 0.28	0.26 / 0.28	0.20 / 0.28
	5.3	Lowering speed, laden/unladen	%	0.20 / 0.34	0.20 / 0.34	0.20 / 0.34	0.20 / 0.34	0.20 / 0.34
	5.8	Max. gradeability, laden/unladen		11 / 11	10 / 10	9 / 9	11 / 11	10 / 10
	5.10	Service brake		electr / e.magn	electr / e.magn	electr / e.magn	electr / e.magn	electr / e.magn
Electric engine	6.1	Drive motor rating S2 60 min	kW	4	4	4	4	4
	6.2	Lift motor rating at S3 15%	kW	3	3	3	3	3
	6.3	Battery according to DIN 43531/35/36 A, B, C, no		no	no	no	no	no
	6.4	Battery voltage/nominal capacity K5	V/Ah	24 / 300 *	24 / 400	24 / 400	24 / 300 *	24 / 400
	6.5	Battery weight	kg	260	330	330	260	330
	6.6	Energy consumption according to VDI cycle	kWh/h	1.46	1.88	2.29	2.61	3,25
		Vibrations according to EN 13059	m/sec	< 2.5	< 2.5	< 2.5	< 4.3	< 4.3
	8.1	Type of drive unit		AC - MOSFET	AC - MOSFET	AC - MOSFET	AC - MOSFET	AC - MOSFET
		Guaranteed sound power 2000/14/EC	dB (A)	< 70	< 70	< 70	< 70	< 70

* MC10 = available with 400Ah battery .
** Only with Stand On version (min. inside dimension 2000mm).
(1) 2 stage mast LFL
(2) 35 / 100 / 1200mm option
(3) Reverse tiller on Stand On version. Longer tiller on all versions.

MC series

Models: MC10, MC12, MC15

People. Products. Productivity.™

Tiller head and controls
The tiller head is designed for operator comfort and features an ergonomic shaped handle with angled grips and integral hand guard. A large dimensioned, low effort, butterfly button controls direction of travel and speed as well as the electromagnetic brake, all are accessible without having to remove the hand from the handle. Lift and lowering, tilt and side shift buttons located on the tiller head can be readily accessed for left or right hand use. The travel direction inverter button is designed for maximum angle of contact with the operator's body. When activated, the direction of travel is automatically reversed and the truck comes to a stop. The horn is located on top of the tiller head and is actuated by thumb or fore finger. The creep speed control allows the truck to be operated with the tiller arm in the vertical position at reduced speed for manoeuvring in tight confines. The tiller arm is spring assisted and returns automatically to the vertical position when released and can be rotated for ride driving (optional).

Instrumentation
The pallet truck's dash board features a multi-function indicator displaying information on the status of the truck and alarm conditions should they occur. Operational information includes that provided by the battery discharge indicator and odometer. The red mushroom shaped button can be activated to stop the truck immediately in case of an emergency.

Operator platform (optional use)
The large operator platform allows the operator to determine the most comfortable driving position during long travel distances, providing the operator with maximum comfort. The cushioned platform incorporates an operator presence switch (or "man on board" sensor), preventing the truck from operating without a driver present. The dash board has compartments for stationery and other small items with an optional A4 document holder.

Servo power steering
The servo power steering system reduces steering effort, making the truck easy and light to steer in all working situations. The steering reacts immediately to ensure maximum performance.

Chassis and forks
The steel welded chassis is surface treated and painted with two-component epoxy paint. The three chassis lengths available and the 939mm maximum width of the truck make it ideal for handling loads in tight spaces for example inside containers or in stocking corridors.

The FEM 2A forks are manufactured from forged steel.

Masts
A range of masts is available to match all operating needs. The none dampening masts are available in two stage LFL and three stage FFL configuration as standard.

Battery
A range of power options is available through a choice of vertically extracted batteries:-

24V - 300 Ah

24V - 400 Ah

Wheels
All wheels are manufactured from Vulkollan.

Load wheels are fitted in manner to avoid any impact with load unit.

Electric motors
The 4kW AC motor provides instant response to forward and reverse traction inputs, providing considerable torque. The maintenance free motor (inspection intervals required every 1,000 operating hours) provides low cost long operational life. The 3 kW DC lift motor provides power to match the truck's operational requirements.

Traction – steering unit
The cast-iron gear train has helical gears immersed in an oil bath. The motor is mounted vertically for efficient ventilation and to eliminate flexing stresses to the power cables to ensure maximum uptime. The steering is actuated by gear-gear, a maintenance and regulation-free system.

Hydraulic unit
The silent, powerful hydraulic pump, activated by the electric motor, is of double gear type. The transparent tank makes the checking of the hydraulic oil level easy. All hydraulics functions are actuated by solenoid valves activated directly by the tiller push buttons. Lift and lowering are by proportional control.

Electronic controls
The Combi MOSFET controller manages both the AC traction engine and the DC lift motor eliminating the need for contactors. High energy efficiency and motor performance increases shift operation time and reduces battery charging. The combined characteristics of the traction motor and the operator control panel enhance the efficiency of the release and inversion braking, without reduction of autonomy. This leaves the electromagnetic brake for parking and emergencies. Electronic performance parameters are easily customised by a service technician. The truck performance output can easily be matched to ensure the maximum application requirements.

Options
Options available include:-

- Selection of drive wheels
- Selection of fork lengths
- Key Pad
- A4 document holder
- Cold store - 30°C
- Load backrest
- Mast selection
- Side shift

HYSTER-YALE UK LIMITED
trading as **Yale Europe Materials Handling**
Centennial House,
Frimley Business Park,
Frimley, Surrey GU16 7SG, United Kingdom.

Tel: +44 (0) 1276 538500 Fax: +44 (0) 1276 538559

www.yale-forklifts.eu

Publication part no. 220990201 Rev.03 Printed in The Netherlands (0316HG) EN.

Safety: This truck conforms to the current EU requirements. Specification is subject to change without notice.

Truck shown with optional equipment. Country of Registration: England and Wales.
Company Registration Number: 02636775