MR series

Reach Truck

1,400kg / 1,600kg / 2,000kg / 2,500kg

- Complete AC infrastructure on drive, hoist and steering motors
- Standard and Premium touch screen display
- 180° and 360° steering at the touch of a button
- AccuTouch™ mini-lever module or joystick controls
- Vehicle Control Manager - VCM
- Dual CANbus wiring

Truck Dimensions

$$Ast = Wa + R + a = Wa + ((\sqrt{l_6 + x})^2 + (b_{12}/2 - b_{13})^2 + a$$

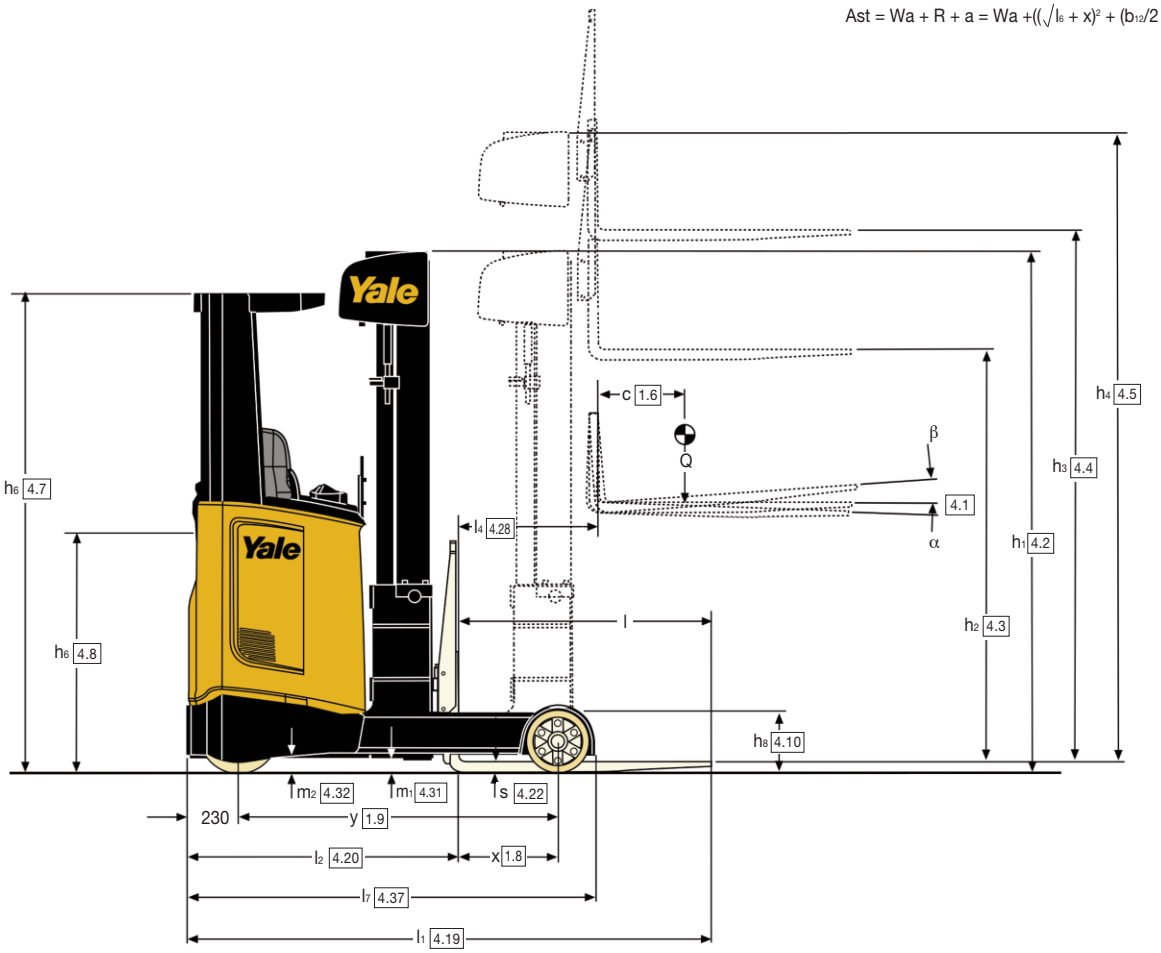

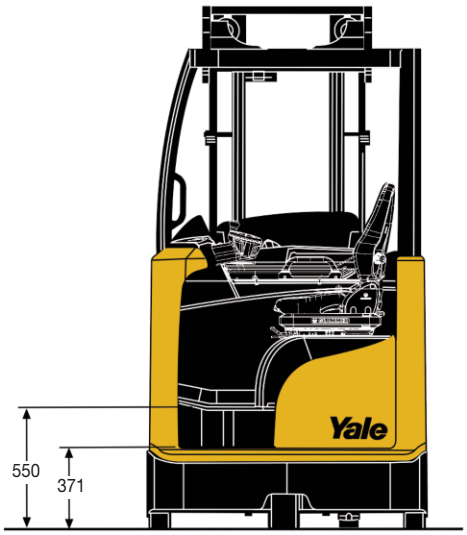

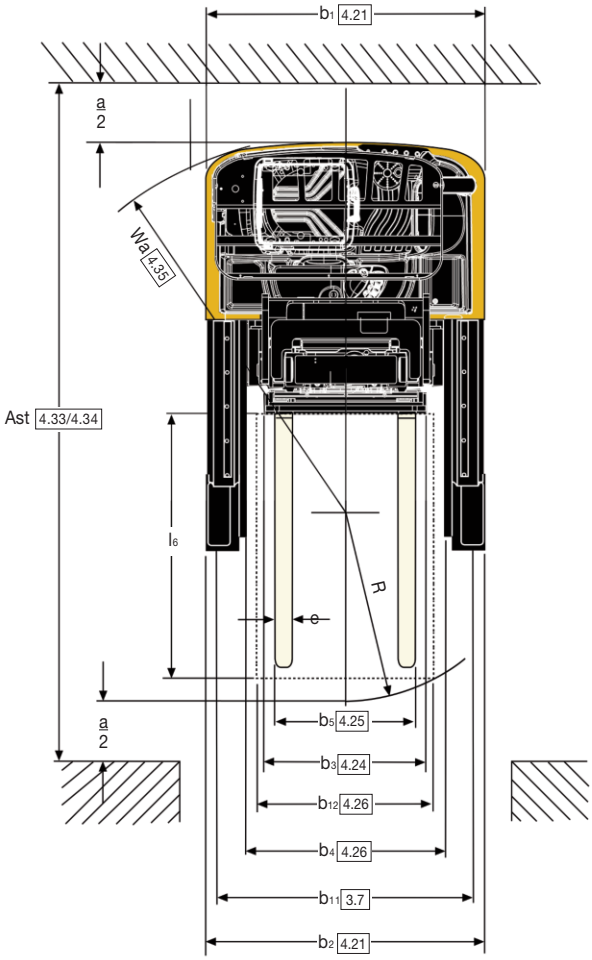

MR14, MR16, MR16N - Mast details, 3 stage full free lift (1,400kg / 1,600kg)

		Lift (h_3) mm	Free lift (h_2) mm	Height of mast lowered (h_1) mm	Height of mast extended (h_4) mm [1]	Weight kg [2]
MR14, MR16	MR16N	5000	1648	2195	5563	911
		5250	1734	2281	5813	936
		5500	1820	2367	6063	961
		5750	1906	2453	6313	986
		6000	1992	2539	6563	1010
		6250	2078	2625	6813	1035
		6500	2164	2711	7063	1060
		6750	2250	2797	7313	1090
		7000	2336	2883	7563	1115
		7250	2422	2969	7813	1140
		7500	2508	3055	8063	1164
		7750	2594	3141	8313	1220
		8000	2680	3227	8563	1244
		8250	2766	3313	8813	1269
		8500	2852	3399	9063	1299
		8750	2938	3485	9313	1324
		9000	3024	3571	9563	1349
		9250	3110	3657	9813	1376
		9500	3196	3743	10063	1400
		9750	3282	3829	10313	1425
		10000	3368	3915	10563	1454
		10250	3454	4001	10813	1478
		10500	3540	4087	11063	1503

[1] With load backrest h4 + 508 mm.
[2] All weights are: mast structures (weldment, cylinders, chain, pulley) + carriage + load backrest + oil. **Excluded:** forks, accessories.

MR20, MR25 - Mast details, 3 stage full free lift (2,000kg / 2,500kg)

Lift (h_3) mm	Free lift (h_2) mm	Height of mast lowered (h_1) mm	Height of mast extended (h_4) mm [1]	Weight kg [2]
4650	1582	2195	5263	958
4900	1668	2281	5513	985
5150	1754	2367	5763	1012
5400	1840	2453	6013	1038
5650	1926	2539	6263	1065
5900	2012	2625	6513	1092
6150	2098	2711	6763	1118
6400	2184	2797	7013	1150
6650	2270	2883	7263	1177
6900	2356	2969	7513	1204
7150	2442	3055	7763	1230
7400	2528	3141	8013	1288
7650	2614	3227	8263	1314
7900	2700	3313	8513	1341
8150	2786	3399	8763	1373

[1] With load backrest h4 + 443 mm.
[2] All weights are: mast structures (weldment, cylinders, chain, pulley) + carriage + load backrest + oil. **Excluded:** forks, accessories.

MR16HD - Mast details, Heavy Duty 3 stage full free lift (1,600kg)

Lift (h_3) mm	Free lift (h_2) mm	Height of mast lowered (h_1) mm	Height of mast extended (h_4) mm [1]	Weight kg [2]
7900	2680	3227	8463	1376
8150	2766	3313	8713	1404
8400	2852	3399	8963	1438
8650	2938	3485	9213	1466
8900	3024	3571	9463	1495
9150	3110	3657	9713	1524
9400	3196	3743	9963	1552
9650	3282	3839	10213	1580
9900	3368	3925	10463	1612
10150	3454	4011	10713	1641
10400	3540	4097	10963	1699
10650	3626	4183	11213	1728
10900	3712	4269	11463	1756
11150	3798	4355	11713	1785
11400	3884	4441	11963	1813

[1] With load backrest h4 + 508 mm.
[2] All weights are: mast structures (weldment, cylinders, chain, pulley) + carriage + load backrest + oil. **Excluded:** forks, accessories.

MR20HD - Mast details, Heavy Duty 3 stage full free lift (2,000kg)

Lift (h_3) mm	Free lift (h_2) mm	Height of mast lowered (h_1) mm	Height of mast extended (h_4) mm [1]	Weight kg [2]
7750	2614	3227	8363	1402
8000	2700	3313	8613	1431
8250	2786	3399	8863	1465
8500	2872	3485	9113	1494
8750	2958	3571	9363	1523
9000	3044	3657	9613	1552
9250	3130	3743	9863	1581
9500	3216	3839	10113	1609
9750	3302	3925	10363	1638
10000	3388	4011	10613	1671
10250	3474	4097	10863	1729
10500	3560	4183	11113	1758
10750	3646	4269	11363	1787
11000	3732	4355	11613	1816
11250	3818	4441	11863	1844
11500	3904	4527	12113	1873
11750	3990	4613	12363	1902
12000	4076	4699	12613	1931
12250	4162	4785	12863	1959
12500	4248	4871	13113	1988

[1] With load backrest h4 + 443 mm.
[2] All weights are: mast structures (weldment, cylinders, chain, pulley) + carriage + load backrest + oil. **Excluded:** forks, accessories.

MR14 truck dimensions for batteries

Distinguishing mark		Battery type		C "Super"	C	C "Super"	C	C "Super"
	1.2	Manufacturer's type designation		**MR14**	**MR14**	**MR14**	**MR14**	**MR14**
	1.8	Load distance, centre of drive axle to fork	x (mm)	402	330	330	258	258
	1.9	Wheelbase	y (mm)	1400	1400	1400	1400	1400
Weights	2.1	Service weight	kg	3112	3309	3320	3495	3541
	2.3	Axle loading, unladen front/rear [5]	kg	1977 / 1135	2025 / 1285	2032 / 1289	2055 / 1440	2084 / 1457
	2.4	Axle loading fork advanced, laden front/rear	kg	682 / 3830	792 / 3917	800 / 3921	885 / 4010	914 / 4027
	2.5	Axle loading fork retracted, laden front/rear	kg	1778 / 2735	1753 / 2956	1760 / 2960	1711 / 3184	1741 / 3201
Dimensions	4.19	Overall length	l_1 (mm)	2379	2451	2451	2523	2523
	4.20	Length to face of forks	l_2 (mm)	1229	1301	1301	1373	1373
	4.28	Reach distance	l_4 (mm)	585	513	513	441	441
	4.34.1	Aisle width for pallets 1000mm x 1200mm crossways	Ast (mm)	2718	2771	2771	2825	2826
	4.34.2	Aisle width for pallets 800mm x 1200mm lengthways	Ast (mm)	2764	2829	2829	2895	2895
	4.35	Turning radius	Wa (mm)	1671	1671	1671	1671	1671
Electric-engine	6.3	Battery according to DIN 43531/35/36 A, B, C, no		C "Super"	C	C "Super"	C	C "Super"
	6.4	Battery voltage/nominal capacity K_5	(V) / (Ah)	48 / 465	48 / 560	48 / 620	48 / 700	48 / 775
	6.5	Battery weight [4]	kg	750	939	950	1119	1165

MR16 truck dimensions for batteries

Distinguishing mark		Battery type		C "Super"	C	C "Super"	C	C "Super"
	1.2	Manufacturer's type designation		**MR16**	**MR16**	**MR16**	**MR16**	**MR16**
	1.8	Load distance, centre of drive axle to fork	x (mm)	452	380	380	308	308
	1.9	Wheelbase	y (mm)	1450	1450	1450	1450	1450
Weights	2.1	Service weight	kg	3162	3360	3371	3546	3592
	2.3	Axle loading, unladen front/rear [5]	kg	2018 / 1144	2069 / 1291	2077 / 1294	2103 / 1443	2133 / 1459
	2.4	Axle loading fork advanced, laden front/rear	kg	601 / 4162	714 / 4246	721 / 4250	810 / 4336	839 / 4352
	2.5	Axle loading fork retracted, laden front/rear	kg	1853 / 2909	1825 / 3135	1832 / 3139	1779 / 3367	1809 / 3383
Dimensions	4.19	Overall length	l_1 (mm)	2379	2451	2451	2523	2523
	4.20	Length to face of forks	l_2 (mm)	1229	1301	1301	1373	1373
	4.28	Reach distance	l_4 (mm)	635	563	563	491	491
	4.34.1	Aisle width for pallets 1000mm x 1200mm crossways	Ast (mm)	2731	2781	2781	2834	2834
	4.34.2	Aisle width for pallets 800mm x 1200mm lengthways	Ast (mm)	2767	2830	2830	2896	2896
	4.35	Turning radius	Wa (mm)	1718	1718	1718	1718	1718
Electric-engine	6.3	Battery according to DIN 43531/35/36 A, B, C, no		C "Super"	C	C "Super"	C	C "Super"
	6.4	Battery voltage/nominal capacity K_5	(V) / (Ah)	48 / 465	48 / 560	48 / 620	48 / 700	48 / 775
	6.5	Battery weight [4]	kg	750	939	950	1119	1165

MR16N truck dimensions for batteries

Distinguishing mark		Battery type		B "Super"	B	B "Super"	B	B "Super"
	1.2	Manufacturer's type designation		**MR16N**	**MR16N**	**MR16N**	**MR16N**	**MR16N**
	1.8	Load distance, centre of drive axle to fork	x (mm)	382	292	292	202	202
	1.9	Wheelbase	y (mm)	1450	1450	1450	1450	1450
Weights	2.1	Service weight	kg	3115	3309	3317	3498	3514
	2.3	Axle loading, unladen front/rear [5]	kg	1924 / 1191	1947 / 1362	1952 / 1365	1955 / 1543	1965 / 1549
	2.4	Axle loading fork advanced, laden front/rear	kg	572 / 4143	672 / 4237	677 / 4240	757 / 4341	766 / 4347
	2.5	Axle loading fork retracted, laden front/rear	kg	1682 / 3033	1606 / 3303	1611 / 3306	1514 / 3584	1524 / 3590
Dimensions	4.19	Overall length	l_1 (mm)	2449	2539	2539	2629	2629
	4.20	Length to face of forks	l_2 (mm)	1299	1389	1389	1479	1479
	4.28	Reach distance	l_4 (mm)	565	475	475	385	385
	4.34.1	Aisle width for pallets 1000mm x 1200mm crossways	Ast (mm)	2762	2828	2828	2898	2899
	4.34.2	Aisle width for pallets 800mm x 1200mm lengthways	Ast (mm)	2811	2893	2893	2976	2976
	4.35	Turning radius	Wa (mm)	1700	1700	1700	1700	1700
Electric-engine	6.3	Battery according to DIN 43531/35/36 A, B, C, no		B "Super"	B	B "Super"	B	B "Super"
	6.4	Battery voltage/nominal capacity K_5	(V) / (Ah)	48 / 465	48 / 560	48 / 620	48 / 700	48 / 775
	6.5	Battery weight [4]	kg	750	937	945	1119	1135

MR20 truck dimensions for batteries

Distinguishing mark		Battery type		C "Super"	C	C "Super"
	1.2	Manufacturer's type designation		**MR20**	**MR20**	**MR20**
	1.8	Load distance, centre of drive axle to fork	x (mm)	430	358	358
	1.9	Wheelbase	y (mm)	1500	1500	1500
Weights	2.1	Service weight	kg	3626	3801	3847
	2.3	Axle loading, unladen front/rear [5]	kg	2268 / 1358	2296 / 1504	2326 / 1520
	2.4	Axle loading fork advanced, laden front/rear	kg	679 / 4947	770 / 5030	801 / 5046
	2.5	Axle loading fork retracted, laden front/rear	kg	2039 / 3586	1971 / 3829	2002 / 3845
Dimensions	4.19	Overall length	l_1 (mm)	2451	2523	2523
	4.20	Length to face of forks	l_2 (mm)	1301	1373	1373
	4.28	Reach distance	l_4 (mm)	613	541	541
	4.34.1	Aisle width for pallets 1000mm x 1200mm crossways	Ast (mm)	2795	2846	2846
	4.34.2	Aisle width for pallets 800mm x 1200mm lengthways	Ast (mm)	2835	2900	2900
	4.35	Turning radius	Wa (mm)	1767	1767	1767
Electric-engine	6.3	Battery according to DIN 43531/35/36 A, B, C, no		C "Super"	C	C "Super"
	6.4	Battery voltage/nominal capacity K_5	(V) / (Ah)	48 / 620	48 / 700	48 / 775
	6.5	Battery weight [4]	kg	950	1119	1165

MR25 truck dimensions for batteries

Distinguishing mark		Battery type		C "Super"	C	C "Super"
	1.2	Manufacturer's type designation		**MR25**	**MR25**	**MR25**
	1.8	Load distance, centre of drive axle to fork	x (mm)	503	431	431
	1.9	Wheelbase	y (mm)	1650	1650	1650
Weights	2.1	Service weight	kg	4084	4230	4292
	2.3	Axle loading, unladen front/rear [5]	kg	2552 / 1532	2565 / 1665	2606 / 1686
	2.4	Axle loading fork advanced, laden front/rear	kg	804 / 5780	876 / 5855	917 / 5875
	2.5	Axle loading fork retracted, laden front/rear	kg	2402 / 4182	2306 / 4424	2348 / 4444
Dimensions	4.19	Overall length	l_1 (mm)	2528	2600	2600
	4.20	Length to face of forks	l_2 (mm)	1378	1450	1450
	4.28	Reach distance	l_4 (mm)	686	614	614
	4.34.1	Aisle width for pallets 1000mm x 1200mm crossways	Ast (mm)	2890	2938	2938
	4.34.2	Aisle width for pallets 800mm x 1200mm lengthways	Ast (mm)	2915	2978	2978
	4.35	Turning radius	Wa (mm)	1911	1911	1911
Electric-engine	6.3	Battery according to DIN 43531/35/36 A, B, C, no		C "Super"	C	C "Super"
	6.4	Battery voltage/nominal capacity K_5	(V) / (Ah)	48 / 775	48 / 840	48 / 930
	6.5	Battery weight [4]	kg	1165	1306	1368

MR16HD truck dimensions for batteries

Distinguishing mark		Battery type		C "Super"	C	C "Super"
	1.2	Manufacturer's type designation		**MR16HD**	**MR16HD**	**MR16HD**
	1.8	Load distance, centre of drive axle to fork	x (mm)	308	308	308
	1.9	Wheelbase	y (mm)	1450	1450	1450
Weights	2.1	Service weight	kg	4049	4224	4270
	2.3	Axle loading, unladen front/rear [5]	kg	2424 / 1625	2428 / 1796	2457 / 1813
	2.4	Axle loading fork advanced, laden front/rear	kg	891 / 4758	979 / 4845	1009 / 4861
	2.5	Axle loading fork retracted, laden front/rear	kg	2180 / 3469	2104 / 3720	2134 / 3736
Dimensions	4.19	Overall length	l_1 (mm)	2523	2523	2523
	4.20	Length to face of forks	l_2 (mm)	1373	1373	1373
	4.28	Reach distance	l_4 (mm)	491	491	491
	4.34.1	Aisle width for pallets 1000mm x 1200mm crossways	Ast (mm)	2834	2834	2834
	4.34.2	Aisle width for pallets 800mm x 1200mm lengthways	Ast (mm)	2896	2896	2896
	4.35	Turning radius	Wa (mm)	1718	1718	1718
Electric-engine	6.3	Battery according to DIN 43531/35/36 A, B, C, no		C "Super"	C	C "Super"
	6.4	Battery voltage/nominal capacity K_5	(V) / (Ah)	48 / 620	48 / 700	48 / 775
	6.5	Battery weight [4]	kg	950	1119	1165

MR20HD truck dimensions for batteries

Distinguishing mark		Battery type		C "Super"	C	C "Super"
	1.2	Manufacturer's type designation		**MR20HD**	**MR20HD**	**MR20HD**
	1.8	Load distance, centre of drive axle to fork	x (mm)	353	281	281
	1.9	Wheelbase	y (mm)	1500	1500	1500
Weights	2.1	Service weight	kg	4471	4617	4679
	2.3	Axle loading, unladen front/rear [5]	kg	2597 / 1874	2577 / 2040	2616 / 2063
	2.4	Axle loading fork advanced, laden front/rear	kg	921 / 5550	985 / 5632	1024 / 5655
	2.5	Axle loading fork retracted, laden front/rear	kg	2266 / 4205	2149 / 4468	2189 / 4490
Dimensions	4.19	Overall length	l_1 (mm)	2528	2600	2600
	4.20	Length to face of forks	l_2 (mm)	1378	1450	1450
	4.28	Reach distance	l_4 (mm)	536	464	464
	4.34.1	Aisle width for pallets 1000mm x 1200mm crossways	Ast (mm)	2850	2903	2903
	4.34.2	Aisle width for pallets 800mm x 1200mm lengthways	Ast (mm)	2904	2970	2970
	4.35	Turning radius	Wa (mm)	1767	1767	1767
Electric-engine	6.3	Battery according to DIN 43531/35/36 A, B, C, no		C "Super"	C	C "Super"
	6.4	Battery voltage/nominal capacity K_5	(V) / (Ah)	48 / 775	48 / 840	48 / 930
	6.5	Battery weight [4]	kg	1165	1306	1368

Notes - relates to all battery dimensions tables. [4] These values may vary of +/- 5%. [5] Forks retracted. All weights (2.1 to 2.5) are with lowest mast and standard forks.

Standard equipment and options

	Feature	MR14 / 16	MR16N	MR20 / 25	MR16HD	MR20HD
Operator Compartment	Intermediate step	■	■	■	■	■
	Grab handle on overhead guard post	■	■	■	■	■
	Grab handle under armrest	■	■	■	■	■
	AccuTouch™ mini-levers mounted on adjustable length armrest	■	■	■	■	■
	Joystick mounted on adjustable length armrest	❍	❍	❍	❍	❍
	Full suspension seat - 60 mm suspension travel cloth upholstery	■	■	■	■	■
	Full suspension seat - 80 mm suspension travel cloth upholstery	❍	❍	❍	❍	❍
	Headrest (cloth version only)	❍	❍	❍	❍	❍
	Synchronised seat cushion and backrest movement (cloth version only)	❍	❍	❍	❍	❍
	Seat belt	❍	❍	❍	❍	❍
	Heated seat	❍	❍	❍	❍	❍
	Antistatic seat (cloth version only)	❍	❍	❍	❍	❍
	Vinyl seat upholstery	❍	❍	❍	❍	❍
	Standard display	■	■	■	■	■
	Premium display with touch screen	❍	❍	❍	❍	❍
	Keyless access	❍	❍	❍	❍	❍
	Adjustable steering column	■	■	■	■	■
	Automatic park brake Yalestop	■	■	■	■	■
	180° steering	■	■	■	■	■
	360° steering	❍	❍	❍	❍	❍
	Driver select steering mode 180/360° (push button)	❍	❍	❍	❍	❍

Standard equipment and options (continued)

	Feature	MR14 / 16	MR16N	MR20 / 25	MR16HD	MR20HD
Travel performance	Travel speed 11 km/h	■	■	✢	✢	✢
	Travel speed 14 km/h with electric load wheel braking	❍	❍	■	■	■
	Speed slow down mast reached forward	■	■	■	■	■
	Speed slow down on cornering	■	■	■	■	■
	Speed slow down over free lift	■	■	■	■	■
Lift performance / driver assist	3 stage mast / tilting carriage	■	■	■	■	■
	Simultaneous lift / reach functionality	■	■	■	■	■
	Simultaneous hydraulic functionality - 3 functions	❍	❍	❍	❍	❍
	Mast cushioning over free lift/main lift sections - fixed sensor mounting	■	■	■	■	✢
	Lift Comfort package [1]	❍	❍	❍	■	■
	Lift Performance package	❍	❍	✢	■	■
	Laser line fork positioning aid (above free lift)	❍	❍	❍	❍	❍
	Auto side shift centring	❍	❍	❍	❍	❍
	Auto fork levelling in the horizontal position	❍	❍	❍	❍	❍
	Height preselector (with/without pallet detection device)	❍	❍	❍	❍	❍
	Fork mounted camera / monitor	❍	❍	❍	❍	❍
	Weight indicator	❍	❍	❍	❍	❍
Application environment	5th hydraulic function	❍	❍	❍	❍	❍
	Universal support bracket	❍	❍	❍	❍	❍
	Beverage holder and document tray	❍	❍	❍	❍	❍
	A4 clipboard	❍	❍	❍	❍	❍
	Stretch film roll holder	❍	❍	❍	❍	❍
	Lift limit with override (1 x height setting)	❍	❍	❍	❍	❍
	Lift limit with override (2 x height settings)	❍	❍	❍	❍	❍
	Lower limit (with override option)	❍	❍	❍	❍	❍
	Flashing beacon	❍	❍	❍	❍	❍
	Work lights x 2 (mast side)	❍	❍	❍	❍	❍
	Work lights x 2 (drive side)	❍	❍	❍	❍	❍
	Polycarbonate (lexan) protection on overhead guard	❍	❍	❍	❍	❍
	Metal grid protection on overhead guard	❍	❍	❍	❍	❍
	Top / front load wheel protection	■	■	■	■	■
	Side load wheel protection	❍	❍	❍	❍	❍
	High temperature environment	❍	❍	❍	❍	❍
	Side battery change - battery tray rollers	❍	❍	❍	❍	❍
	Side battery change table	❍	❍	❍	❍	❍
	Extension cable	❍	❍	❍	❍	❍
	Drive-in overhead guard (w900 x h1400 / w900 x h1700 mm)	❍	❍	❍	❍	❍
	Antistatic drive and load wheels	❍	❍	❍	❍	❍
	Wet surface drive and load wheels	❍	❍	❍	❍	❍
	Side guidance rollers	❍	❍	MR20	❍	❍
	DC/DC converter (choice of 12V/48V, 24V / 48V, 12-24V / 48V options)	❍	❍	❍	❍	❍
	Audible alarm (choice of forks leading, forks trailing, both travel directions)	❍	❍	❍	❍	❍
	Load backrest (choice of heights 1000 / 1500 mm)	❍	❍	❍	❍	❍
Chassis / Battery sizes	Chassis width (max) 1265 mm	■	✢	MR20	■	✢
	1125 mm	✢	■	✢	✢	✢
	1345 mm	✢	✢	MR25	✢	❍
	Battery sizes [2] 420 - 465 Ah	❍	❍	✢	✢	✢
	560 - 620 Ah	❍	❍	❍ MR20	❍	✢
	700 - 775 Ah	❍	❍	❍	❍	❍
	840 - 930 Ah	✢	✢	❍ MR25	✢	❍

[1] Includes;
End of stroke slow down on lift.
Soft stop on lowering.
Height controlled mast cushioning over Free Lift/Main lift mast section.
Height indicator.

[2] DIN C battery on MR14/MR16/MR20/MR25/MR16HD/MR20HD
DIN B battery on MR16N

■ Standard
❍ Optional
✢ Not available

MR14, MR16, MR16N, MR16HD, MR20, MR20HD, MR25 - General Specifications

Distinguishing mark	1.1	Manufacturer (abbreviation)		Yale	Yale
	1.2	Manufacturer's type designation		**MR14**	**MR16**
	1.3	Drive: electric (battery or mains), diesel, petrol, fuel gas		Electric (Battery)	Electric (Battery)
	1.4	Operator type: hand, pedestrian, standing, seated, order-picker		Seated	Seated
	1.5	Rated capacity/rated load	Q (kg)	1400	1600
	1.6	Load centre distance	c (mm)	600	600
	1.8	Load distance, centre of drive axle to fork	x (mm)	402	452
	1.9	Wheelbase	y (mm)	1400	1450
Weights	2.1	Service weight	kg	3112	3162
	2.3	Axle loading, laden front/rear [5]	kg	1977 / 1135	2018 / 1144
	2.4	Axle loading, fork advanced, laden front/rear	kg	682 / 3830	601 / 4162
	2.5	Axle loading, fork retracted, unladen front/rear	kg	1778 / 2735	1853 / 2909
Tyres/chassis	3.1	Tyres: polyurethane, topthane, vulkollan, front/rear		Vulkollan / Vulkollan	Vulkollan / Vulkollan
	3.2	Tyre size, front	ø mm x mm	343 x 140	343 x 140
	3.3	Tyre size, rear	ø mm x mm	285 x 100	285 x 100
	3.5	Wheels, number front/rear (x = driven wheels)		1 x /2	1 x /2
	3.7	Tread, rear	b11 (mm)	1155	1155
Dimensions	4.1	Tilt of mast/fork carriage forward/backward	α / β (°)	2 / 4	2 / 4
	4.2	Height of mast, lowered	h1 (mm)	2195	2195
	4.3	Free lift	h2 (mm)	1648	1648
	4.4	Lift	h3 (mm)	5000	5000
	4.5	Height, mast extended [1]	h4 (mm)	5563	5563
	4.7	Height of overhead guard (cabin) [2]	h6 (mm)	2175	2175
	4.8	Seat height/stand height	h7 (mm)	1082	1082
	4.10	Height of wheel arms	h8 (mm)	308	308
	4.19	Overall length	l1 (mm)	2379	2379
	4.20	Length to face of forks	l2 (mm)	1229	1229
	4.21	Overall width [3]	b1/b2 (mm)	1265	1265
	4.22	Fork dimensions ISO2331	s/e/l (mm)	40 / 80 / 1150	40 / 120 / 1150
	4.23	Fork carriage ISO 2328, class/type A,B		2A	2A
	4.24	Fork carriage width	b3 (mm)	700	700
	4.25	Distance between fork-arms, min./max. [8]	b5 (mm)	220 / 640	260 / 680
	4.26	Distance between wheel arms / loading surfaces	b4 (mm)	900	900
	4.28	Reach distance	l4 (mm)	585	635
	4.31	Ground clearance, laden, below mast	m1 (mm)	75	75
	4.32	Ground clearance, centre of wheelbase	m2 (mm)	75	75
	4.34.1	Aisle width for pallets 1000mm x 1200mm crossways	Ast (mm)	2718	2731
	4.34.2	Aisle width for pallets 800mm x 1200mm lengthways	Ast (mm)	2764	2767
	4.35	Turning radius	Wa (mm)	1671	1718
	4.37	Length across load arms	l7 (mm)	1795	1845
	4.43	Step height	mm	371	371
Performance data	5.1	Travel speed, laden/unladen [7]	km/h	11 / 11 (14 / 14)	11 / 11 (14 / 14)
	5.1.1	Travel speed, laden/unladen, backwards [7]	km/h	11 / 11 (14 / 14)	11 / 11 (14 / 14)
	5.2	Lift speed, laden/unladen	m/s	0,37 / 0,63 (0,47 / 0,73)	0,32 / 0,63 (0,42 / 0,73)
	5.3	Lowering speed, laden/unladen	m/s	0,55 / 0,55	0,55 / 0,55
	5.4	Reaching speed, laden/unladen	m/s	0,15 / 0,15	0,15 / 0,15
	5.7	Gradeability laden/unladen	%	12 / 15	11 / 15
	5.8	Max gradeability laden/unladen	%	12 / 15	12 / 15
	5.9	Acceleration time laden/unladen	s	on request	on request
	5.10	Service brake		Electric	Electric
Electric-engine	6.1	Drive motor rating S2 60 min	kW	6.4	6.4
	6.2	Lift motor rating at S3 15%	kW	14	14
	6.3	Battery according to DIN 43531/35/36 A, B, C, no		C	C
	6.4	Battery voltage/nominal capacity K_5	(V) / (Ah)	48 / 420 [6]	48 / 420 [6]
	6.5	Battery weight [4]	kg	750	750
	6.6	Energy consumption according to VDI cycle	kWh/h @ Nr of Cycles	on request	on request
	8.1	Type of drive unit		AC	AC
Addition data	10.1	Operating pressure for attachments	bar	180	180
	10.2	Oil volume for attachments	l/min	20	20
	10.7	Sound pressure level at the driver's seat	dB (A)	<69.7	<69.7

[1] With load backrest h4 + 508mm MR14-MR16-MR16N-MR16HD, + 443mm MR20-MR25-MR20HD.
[2] With beacon h6 + 120mm. ; With OHG Grid Protector h6 + 20mm ; With OHG Screen Protector h6 + 30mm.
[3] With load wheels lateral covers: 1289mm MR14-MR16-MR20-MR16HD, 1153mm (MR16N), 1373mm (MR25-MR20HD).
[4] These values may vary of +/- 5%.
[5] Forks retracted.
[6] See Truck dimensions for batteries tables.

Yale	Yale	Yale	Yale	Yale	1.1	Distinguishing mark
MR16N	**MR16HD**	**MR20**	**MR20HD**	**MR25**	1.2	
Electric (Battery)	Electric (Battery)	Electric (Battery)	Electric (Battery)	Electric (Battery)	1.3	
Seated	Seated	Seated	Seated	Seated	1.4	
1600	1600	2000	2000	2500	1.5	
600	600	600	600	600	1.6	
382	308	430	353	503	1.8	
1450	1450	1500	1500	1650	1.9	
3111	4038	3615	4425	4038	2.1	Weights
1922 / 1189	2417 / 1621	2261 / 1354	2567 / 1858	2520 / 1518	2.3	
569 / 4142	883 / 4755	671 / 4943	891 / 5534	773 / 5765	2.4	
1680 / 3032	2172 / 3466	2032 / 3583	2235 / 4189	2371 / 4167	2.5	
Vulkollan / Vulkollan	Vulkollan / Vulkollan	Vulkollan / Vulkollan	Vulkollan / Vulkollan	Vulkollan / Vulkollan	3.1	Tyres/chassis
343 x 140	343 x 140	343 x 140	343 x 140	343 x 140	3.2	
285 x 100	285 x 100	285 x 100	285 x 140	285 x 140	3.3	
1 x /2	1x/2	1x/2	1x/2	1x/2	3.5	
1025	1155	1155	1195	1195	3.7	
2 / 4	2 / 4	2 / 4	2 / 4	2 / 4	4.1	Dimensions
2195	3227	2195	3227	2195	4.2	
1648	2680	1582	2614	1582	4.3	
5000	8050	4650	7900	4650	4.4	
5563	8613	5263	8513	5263	4.5	
2175	2175	2175	2175	2175	4.7	
1082	1082	1082	1082	1082	4.8	
308	308	308	308	308	4.10	
2449	2523	2451	2528	2528	4.19	
1299	1373	1301	1378	1378	4.20	
1125	1265	1265	1345	1345	4.21	
40 / 120 / 1150	40 / 120 / 1150	40 / 120 / 1150	45 / 120 / 1150	45 / 120 / 1150	4.22	
2A	2A	2A	2A	2A	4.23	
700	700	700	700	700	4.24	
260 / 680	260/680	260/680	260/680	260/680	4.25	
795	900	900	900	900	4.26	
565	491	613	536	686	4.28	
75	65	65	65	65	4.31	
75	65	65	65	65	4.32	
2762	2834	2795	2850	2890	4.34.1	
2811	2896	2835	2904	2915	4.34.2	
1700	1718	1767	1767	1911	4.35	
1845	1845	1895	1895	2045	4.37	
371	371	371	371	371	4.42	
11 / 11 (14 / 14)	14 / 14	14 / 14	14 / 14	14 / 14	5.1	Performance data
11 / 11 (14 / 14)	14 / 14	14 / 14	14 / 14	14 / 14	5.1.1	
0,32 / 0,63 (0,42 / 0,73)	0,42 / 0,73	0,37 / 0,64	0,37 / 0,68	0,30 / 0,64	5.2	
0,55 / 0,55	0,55 / 0,55	0,55 / 0,50	0,55 / 0,55	0,55 / 0,50	5.3	
0,15 / 0,15	0,15 / 0,15	0,15 / 0,15	0,15 / 0,15	0,15 / 0,15	5.4	
11 / 15	10 / 14	10 / 15	8 / 13	8 / 14	5.7	
12 / 15	12 / 15	12 / 15	12 / 15	12 / 15	5.8	
on request	on request	on request	on request	on request	5.9	
Electric	Electric	Electric	Electric	Electric	5.10	
6.4	6.4	6.4	6.4	6.4	6.1	Electric-engine
14	14	14	14	14	6.2	
C	C	C	C	C	6.3	
48 / 420 [6]	48 / 700 [6]	48 / 560 [6]	48 / 700 [6]	48 / 700 [6]	6.4	
750	939	939	1119	1119	6.5	
on request	on request	on request	on request	on request	6.6	
AC	AC	AC	AC	AC	8.1	
180	180	180	180	180	10.1	Addition data
20	20	20	20	20	10.2	
<69.7	<69.7	<69.7	<69.7	<69.7	10.7	

[7] Values in brackets are Optional.
[8] Sideshift distance on either side is + / -75 mm on all trucks. Reduction of + / - 25 mm on MR16N.

All values are nominal values and they are subject to tolerances. For further information, please contact the manufacturer.

Yale products might be subject to change without notice. Lift trucks illustrated may feature optional equipment. Values may vary with alternative configurations.

MR series

Models: MR14, MR16, MR16N, MR16HD, MR20, MR20HD, MR25

The new Yale® MR Series Reach Truck features three piece design same for all different models. The main differentiators between the models are the wheelbase and the truck width.

Overhead Guard
The one piece welded overhead guard gives a good visibility to all directions. The two different pillar profiles give adequate stiffness strength, with a minimum impact on visibility. As option drive-in overhead guards are available.

Operator compartment
The operator compartment structure is a one piece welded structure developed for long term durability. It is bolted on the frame having boxed bottom part for stiff compartment and reduced vibrations to the operator.

The step with grip profile has a maximum depth of 130 mm and low height of 371mm.

Frame
Completely welded base frame is available in 2 basic widths and 4 different lengths. The HD version has an increased width over the load arms. The width is reduced to the standard width of the frame with an angled plate at the connection to the load arms and rear frame.

Seats
Two different full-suspension seats with additional options are available, both of which are adjustable for operator weight, fore/aft position and backrest angle.

Steering console
The steering console is one hand adjustable for length to provide the optimum position for the operator. It has a 10° incline in the direction of the operator, as a result of the length adjustment the height will increase with 17.5 mm from the max in to max out position. This will ease the in- and egress of the operator even in extracted steering column position. To improve operators left arm ergonomics the steering column is slightly 3° angled anti clockwise.

Steering system
The steering system is a fully fly-by-wire system. The steer wheel input and the steer motor output are connected to the controller and managed by the VCM. The steer positioning sensors provide feedback of the actual steer position. The standard steering has a 180° steer angle, a 360° option is available and enabled by the VCM software. A third option allows switching from 180° to 360° by pressing a steering mode selection switch on the dashboard. Speed reduction on cornering is automatic and can be adjusted.

Foot pedals
Low resistant foot pedals positioned on the slightly inclined (13°) floor plate to improve the pedal operation ergonomics. The useful operator floor space is increased with the pedal layout is divided over the available width. The operator presence switch is slightly rotated to the mid line off the operator seat to improve operator left

foot position. The thick (min. 8 mm) one piece floor mat absorbs vibrations and noise out of the motor compartment.

Dash display
The display is integrated in the dashboard in front of the operator. In this location the display is easy to read and to operate. The standard display utilises the proven display design from Yale ECB trucks. An optional industry first premium touch screen display allows operators to be in full control of the truck at all times.

Vehicle Control Manager
The Vehicle Control Manager (VCM) is the central module of the truck and it is linked to the truck modules via Dual CANbus system to increase reliability and truck dependability. With this proven technology used in the automobile sector point to point wiring is greatly reduced.

Hydraulic controls
The Hydraulic controls are integrated in ergonomic sliding armrest under driver's right hand. The standard controls is proven AccuTouch™ mini-levers module with separate horn and direction switches. New designed Joystick with integrated mini lever joystick for best ergonomic hydraulic operation is available as option.

Masts
New 3 stage full free lift mast incorporates new unique Yale designed profiles that reduce the total mast channel width. Lift cylinders position optimised to increase operator visibility and cross members are not in direct line of visibility for critical heights. The stiff and robust mast carriage is a welded construction made out of two lateral plates of 30 mm and several cross bars and base plate of 12 mm thick to create an open boxed frame.

Motors
The next generation AC drive motor is standard across the model range. The drive motor remains in a fixed position to avoid flexing of the power cables. Optimised acceleration and travel speed performance (up to 14 km/h) delivers high load handling efficiency productivity. Easy access through swing-open motor compartment door. The steering motor also uses AC technology and the gear on gear arrangement provides a positive mesh for precise steering control. On power up the drive wheel is automatically centred. A removable plate allows access to the drive tyre/ gear reducer for servicing. The motor compartment including the hoist motor is ventilated.

MR series

Models: MR14, MR16, MR16N, MR16HD, MR20, MR20HD, MR25

NACCO Materials Handling Limited
trading as **Yale Europe Materials Handling**
Centennial House, Frimley Business Park,
Frimley, Surrey GU16 7SG, United Kingdom.
Tel: +44 (0) 1276 538500 Fax: +44 (0) 1276 538559

www.yale-forklifts.eu

Country of Registration: England. Company Registration Number: 02636775

Safety. This truck conforms to the current EU requirements. Specification is subject to change without notice.

Yale, VERACITOR and are registered trademarks. "PEOPLE, PRODUCTS, PRODUCTIVITY", PREMIER, Hi-Vis, and CSS are trademarks in the United States and certain other jurisdictions. MATERIALS HANDLING CENTRAL and MATERIAL HANDLING CENTRAL are Service Marks in the United States and certain other jurisdictions. is a Registered Copyright. © Yale Europe Materials Handling 2013. All rights reserved.

Truck shown with optional equipment

Printed in The United Kingdom (1113HG) EN
Publication part no. 258985541 Rev.12