Series N

2,000kg / 2,500kg / 3,000kg / 3,500kg

Diesel and LPG Forklift Trucks

SPECIFICATION SHEET

Models: GDP/GLP2.0N, GDP/GLP2.5N, GDP/GLP2.5N6, GDP/GLP3.0N, GDP/GLP3.5N

VDI 2198 - General Specifications - GDP/GLP2.0N, GDP/GLP2.5N, GDP/GLP2.5N6, GDP/GLP3.0N, GDP/GL

Distinguishing mark	1.1	Manufacturer		Yale	Yale	Yale	Yale
	1.2	Manufacturer's type designation		**GDP2.0N**	**GLP2.0N**	**GDP2.5N**	**GLP2.5N**
		Engine		Yanmar 2.1L	Yanmar 2.2L	Yanmar 2.1L	Yanmar 2.2L
		Transmission		Electronic Powershift 1-Speed	Electronic Powershift 1-Speed	Electronic Powershift 1-Speed	Electronic Powershift 1-Speed
		Brake Type		Drum Brakes	Drum Brakes	Drum Brakes	Drum Brakes
	1.3	Drive: electric (battery or mains), diesel, petrol, LPG		Diesel	LPG	Diesel	LPG
	1.4	Operator type: hand, pedestrian, standing, seated, order-picker		Seated Rider	Seated Rider	Seated Rider	Seated Rider
	1.5	Rated capacity/rated load	Q (t)	2.0	2.0	2.5	2.5
	1.6	Load centre distance	c (mm)	500	500	500	500
	1.8	Load distance, centre of drive axle to fork	x (mm)	470	470	470	470
	1.9	Wheelbase	y (mm)	1650	1650	1650	1650
Weights	2.1	Service weight	kg	3613	3613	3990	3990
	2.2	Axle loading laden, front/rear	kg	4981 / 632	4981 / 632	5698 / 792	5698 / 792
	2.3	Axle loading unladen, front/rear	kg	1805 / 1808	1805 / 1808	1728 / 2262	1728 / 2262
Tyres/chassis	3.1	Tyres: P = Pneumatic, V = Solid, SE = Super Elastic		SE	SE	SE	SE
	3.2	Tyre size, front		7.00 X 12	7.00 X 12	7.00 X 12	7.00 X 12
	3.3	Tyre size, rear		6.00 X 9	6.00 X 9	6.00 X 9	6.00 X 9
	3.5	Number of wheels, front/rear (X = driven)		2x / 2	2x / 2	2x / 2	2x / 2
	3.6	Tread, front	b_{10} (mm)	983	983	983	983
	3.7	Tread, rear	b_{11} (mm)	958	958	958	958
Dimensions	4.1	Tilt of mast / fork carriage forward / backward	a / b (°)	6 / 6	6 / 6	6 / 6	6 / 6
	4.2	Height, mast lowered	h_1 (mm)	2570	2570	2570	2570
	4.3	Free lift, ▲	h_2 (mm)	50	50	50	50
	4.4	Lift ▲	h_3 (mm)	3900	3900	3900	3900
	4.5	Height, mast extended ■	h_4 (mm)	4500	4500	4500	4500
	4.7	Height of overhead guard ❍	h_6 (mm)	2160	2160	2160	2160
	4.8	Seat height relating to SIP/stand height ◆	h_7 (mm)	1153	1153	1153	1153
	4.12	Coupling height	h_{10} (mm)	440	440	440	440
	4.19	Overall length	l_1 (mm)	3534	3534	3610	3610
	4.20	Length to face of forks	l_2 (mm)	2516	2516	2579	2579
	4.21	Overall width (single / wide / dual)	b_1/b_2 (mm)	1160 / 1280 / 1542	1160 / 1280 / 1542	1160 / 1280 / 1542	1160 / 1280 / 1542
	4.22	Fork dimensions DIN ISO 2331	s/e/l (mm)	40 X 100 X 1000	40 X 100 X 1000	40 X 100 X 1000	40 X 100 X 1000
	4.23	Fork carriage ISO 2328, class/type A, B		II A	II A	II A	II A
	4.24	Fork carriage width ●	b_3 (mm)	1070	1070	1070	1070
	4.31	Ground clearance, laden, below mast	m_1 (mm)	130	130	130	130
	4.32	Ground clearance, centre of wheelbase	m_2 (mm)	160	160	160	160
	4.34.1	Aisle width for pallets 1000 × 1200 crossways	Ast (mm)	3861	3861	3933	3933
	4.34.2	Aisle width for pallets 800 × 1200 lengthways	Ast (mm)	4061	4061	4133	4133
	4.35	Turning radius	Wa (mm)	2191	2191	2263	2263
	4.36	Internal turning radius	b_{13} (mm)	640	640	640	640
	4.41	90° intersecting aisle (with pallet W = 1200mm, L = 1000mm)		2018	2018	2057	2057
	4.42	Step height (from ground to running board)	(mm)	440	440	440	440
	4.43	Step height (between intermediate steps between running board and floor)	(mm)	250	250	250	250
Performance data	5.1	Travel speed, laden/unladen	km/h	18.5 / 18.7	18.5 / 18.7	18.4 / 18.7	18.4 / 18.7
	5.1.1	Travel speed, laden/unladen, backwards	km/h	18.8/ 19.0	18.8 / 19.0	18.7 / 19.0	18.7 / 19.0
	5.2	Lift speed, laden/unladen ❋	m/s	0.61 / 0.65	0.61 / 0.65	0.60 / 0.65	0.60 / 0.65
	5.3	Lowering speed, laden/unladen	m/s	0.58 / 0.5	0.58 / 0.50	0.58 / 0.50	0.58 / 0.50
	5.5	Drawbar pull, laden/unladen *	N	15917	17304	15758	17145
	5.7	Gradeability, laden/unladen **	%	30 / 30	33 / 30	26 / 26	28 / 26
	5.9	Acceleration time, laden/unladen (to 15m)	s	5.2 / 4.7	5.4 / 4.3	5.5 / 4.8	5.9 / 4.5
	5.10	Service brake		Hydraulic	Hydraulic	Hydraulic	Hydraulic
Combustion-engine	7.1	Engine manufacturer / type		Yanmar / 4TNV86CT	Yanmar / 4TN88G	Yanmar / 4TNV86CT	Yanmar / 4TN88G
	7.2	Engine power according to ISO 1585	kW	36.6	42	36.6	42
	7.3	Rated speed	min–1	2500	2500	2500	2500
	7.3.1	Torque at 1/min	(N-m/min)	167 / 1625	174 / 1690	167 / 1625	174 / 1690
	7.4	Number of cylinders/displacement	(-)/cm3	4 / 2091	4 / 2190	4 / 2091	4 / 2190
	7.5	Fuel consumption according to VDI 2198 (CDP/VDP)	l/h or kg/h	2.5 / 2.3	2.4 / 2.2	2.9 / 2.7	2.7 / 2.5
	7.5c	Fuel consumption according to VDI EN16796 (CDP/VDP)	l/h or kg/h	2.1 / 2.0	2.1 / 2.0	2.5 / 2.3	2.4 / 2.2
	7.6	Turnover output (Power / ECO)	(1/h)	92 / 83	96 / 85	92 / 83	96 / 85
	8.1	Type of drive unit		Automatic	Automatic	Automatic	Automatic
Addition data	10.1	Operating pressure for attachments	bar	180	180	180	180
	10.2	Oil volume for attachments ❖	l/min	60	60	60	60
	10.3	Hydraulic oil tank, capacity	litres	34.2	40.6	34.2	40.6
	10.4	Fuel tank, capacity	litres	39.9	-	39.9	-
	10.7	Sound pressure level at the driver's seat ☛	dB(A)	78	77	78	77
	10.7.2	Guaranteed sound power 2001/14/EC	dB(A)	101	101	101	101
	10.8	Towing coupling type		Pin	Pin	Pin	Pin

▲ Top of forks.
■ Without load backrest.
❍ h6 subject to +/- 5 mm tolerance. 2.0N-2.5N add 25mm when front tyre size 28x9-15 is selected.
◆ Full suspension seat to manufacturers SIP.

● Add 32mm with load backrest.
❋ Constant displacement hydraulic pump (CDP).
* At 1.6km/h.
** At 4.8km/h.
❖ Variable.

☛ LPAZ, measured according to the test cycles and based on the weighting values contained in EN12053.

Spec sheet truck based on :-
3290mm (2.5) / 3105mm (3.0) Top of Forks, 2 stage LFL mast with standard carriage, 1000mm forks with manual levers.

LP3.5N

Yale	Yale	Yale	Yale	Yale	Yale	1.1	Distinguishing mark
GDP2.5N6	**GLP2.5N6**	**GDP3.0N**	**GLP3.0N**	**GDP3.5N**	**GLP3.5N**	1.2	
Yanmar 2.1L	Yanmar 2.2L	Yanmar 2.1L	Yanmar 2.2L	Yanmar 2.1L	Yanmar 2.2L		
Electronic Powershift 1-Speed	Electronic Powershift 1-Speed	Electronic Powershift 1-Speed	Electronic Powershift 1-Speed	Electronic Powershift 1-Speed	Electronic Powershift 1-Speed		
Drum Brakes	Drum Brakes	Drum Brakes	Drum Brakes	Drum Brakes	Drum Brakes		
Diesel	LPG	Diesel	LPG	Diesel	LPG	1.3	
Seated Rider	Seated Rider	Seated Rider	Seated Rider	Seated Rider	Seated Rider	1.4	
2.5	2.5	3.0	3.0	3.5	3.5	1.5	
600	600	500	500	500	500	1.6	
495	495	495	495	495	495	1.8	
1700	1700	1700	1700	1700	1700	1.9	
4292	4292	4642	4642	4910	4910	2.1	Weights
5900 / 921	5900 / 921	6635 / 1007	6635 / 1007	7230 / 1180	7230 / 1180	2.2	
1778 / 2514	1778 / 2514	1880 / 2762	1880 / 2762	1683 / 3227	1683 / 3227	2.3	
SE	SE	SE	SE	SE	SE	3.1	Tyres/chassis
28 X 9 - 15	28 X 9 - 15	28 X 9 - 15	28 X 9 - 15	28 X 9 - 15	28 X 9 - 15	3.2	
6.5 X 10	6.5 X 10	6.5 X 10	6.5 X 10	6.5 X 10	6.5 X 10	3.3	
2x / 2	2x / 2	2x / 2	2x / 2	2x / 2	2x / 2	3.5	
959	959	959	959	959	959	3.6	
958	958	958	958	958	958	3.7	
6 / 6	6 / 6	6 / 6	6 / 6	6 / 6	6 / 6	4.1	Dimensions
2592	2592	2692	2692	2692	2692	4.2	
50	50	50	50	50	50	4.3	
3900	3900	3880	3880	3880	3880	4.4	
4500	4500	4552	4552	4552	4552	4.5	
2182	2182	2182	2182	2182	2182	4.7	
1175	1175	1175	1175	1175	1175	4.8	
452	452	462	462	462	462	4.12	
3714	3714	3746	3746	3813	3813	4.19	
2676	2676	2731	2731	2781	2781	4.20	
1186 / 1353 / 1545	1186 / 1353 / 1545	1186 / 1353 / 1545	1186 / 1353 / 1545	1186 / 1353 / 1545	1186 / 1353 / 1545	4.21	
50 X 120 X 1000	50 X 120 X 1000	50 X 120 X 1000	50 X 120 X 1000	50 X 120 X 1000	50 X 120 X 1000	4.22	
II A	II A	III A	III A	III A	III A	4.23	
1070	1070	1070	1070	1070	1070	4.24	
152	152	152	152	152	152	4.31	
182	182	182	182	182	182	4.32	
4027	4027	4069	4069	4144	4144	4.34.1	
4227	4227	4269	4269	4344	4344	4.34.2	
2333	2333	2374	2374	2449	2449	4.35	
660	660	660	660	660	660	4.36	
2089	2089	2110	2110	2149	2149	4.41	
462	462	462	462	462	462	4.42	
250	250	250	250	250	250	4.43	
18.5 / 18.7	18.5 / 18.7	18.4 / 18.6	18.4 / 18.6	18.4 / 18.6	18.4 / 18.6	5.1	Performance data
18.8 / 19.0	18.8 / 19.0	18.7 / 18.9	18.7 / 18.9	18.7 / 18.9	18.7 / 18.9	5.1.1	
0.60 / 0.65	0.60 / 0.65	0.56 / 0.61	0.56 / 0.61	0.56 / 0.61	0.56 / 0.61	5.2	
0.58 / 0.50	0.58 / 0.5	0.58 / 0.53	0.58 / 0.53	0.58 / 0.53	0.58 / 0.50	5.3	
19314	16920	19160	16766	19021	16626	5.5	
30 / 25	26 / 25	26 / 24	23 / 24	24 / 20	21 / 20	5.7	
5.2 / 4.7	5.1 / 4.5	5.3 / 4.7	5.2 / 4.5	5.5 / 4.8	5.3 / 4.6	5.9	
Hydraulic	Hydraulic	Hydraulic	Hydraulic	Hydraulic	Hydraulic	5.10	
Yanmar / 4TNV86CHT	Yanmar / 4TN88G	Yanmar / 4TNV86CHT	Yanmar / 4TN88G	Yanmar / 4TNV86CHT	Yanmar / 4TN88G	7.1	Combustion-engine
44	42	44	42	44	42	7.2	
2500	2500	2500	2500	2500	2500	7.3	
202 / 1675	174 / 1690	202 / 1675	174 / 1690	202 / 1675	174 / 1690	7.3.1	
4 / 2091	4 / 2190	4 / 2091	4 / 2190	4 / 2091	4 / 2190	7.4	
2.8 / 2.6	2.8 / 2.6	3.2 / 2.9	3.2 / 2.9	3.5 / 3.2	3.5 / 3.2	7.5	
2.3 / 2.2	2.5 / 2.3	2.6 / 2.4	2.8 / 2.6	2.9 / 2.6	3.1 / 2.8	7.5c	
92 / 83	96 / 85	90 / 82	95 / 84	89 / 81	95 / 84	7.6	
Automatic	Automatic	Automatic	Automatic	Automatic	Automatic	8.1	
180	180	180	180	180	180	10.1	Addition data
60	60	60	60	60	60	10.2	
34.2	40.6	34.2	40.6	34.2	40.6	10.3	
39.9	-	39.9	-	39.9	-	10.4	
79	77	79	77	79	77	10.7	
101	101	101	101	101	101	10.7.2	
Pin	Pin	Pin	Pin	Pin	Pin	10.8	

All values are nominal values and they are subject to tolerances. For further information, please contact the manufacturer.
Yale products might be subject to change without notice.

Lift trucks illustrated may feature optional equipment.
Values may vary with alternative configurations.

Truck Dimensions

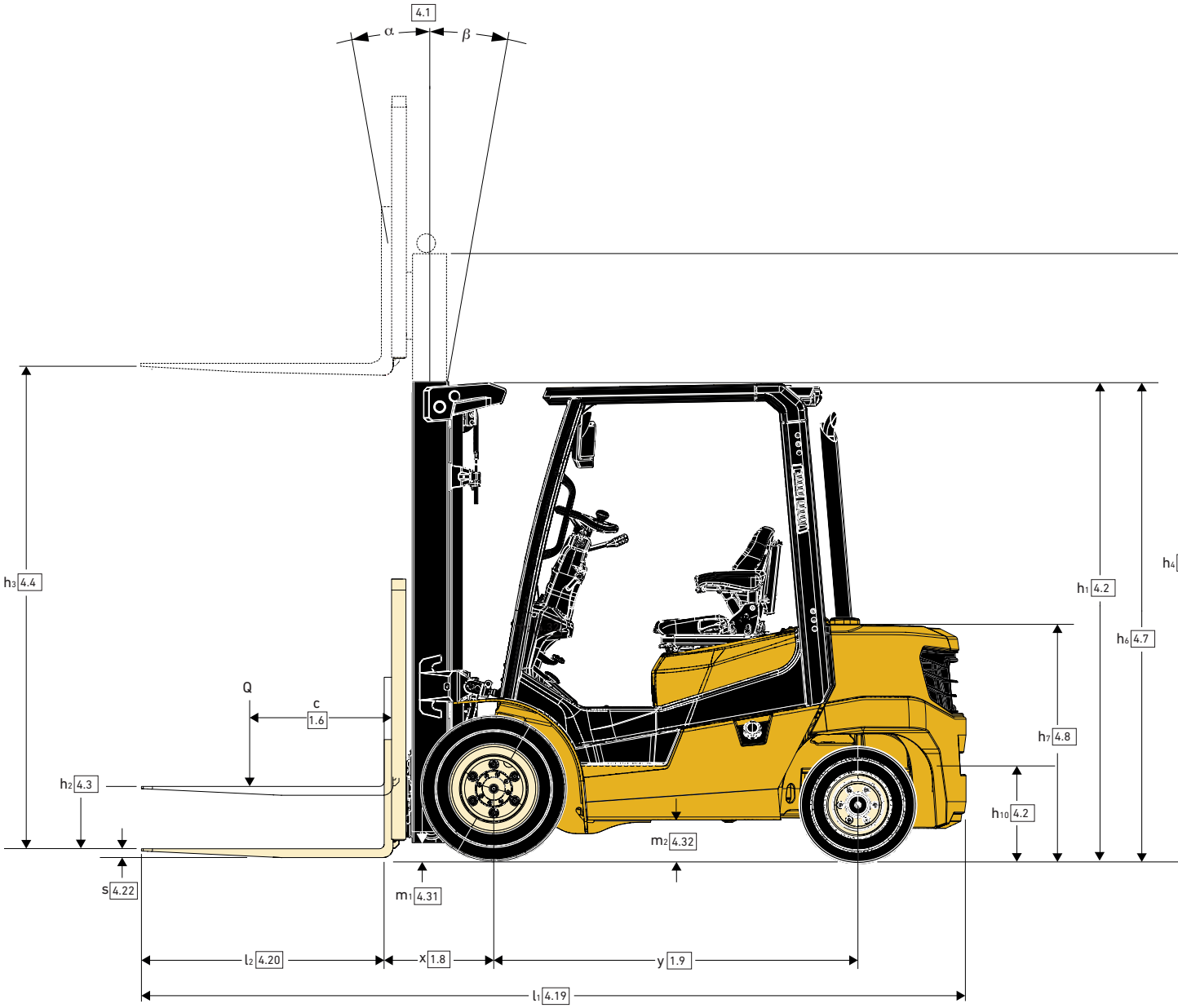

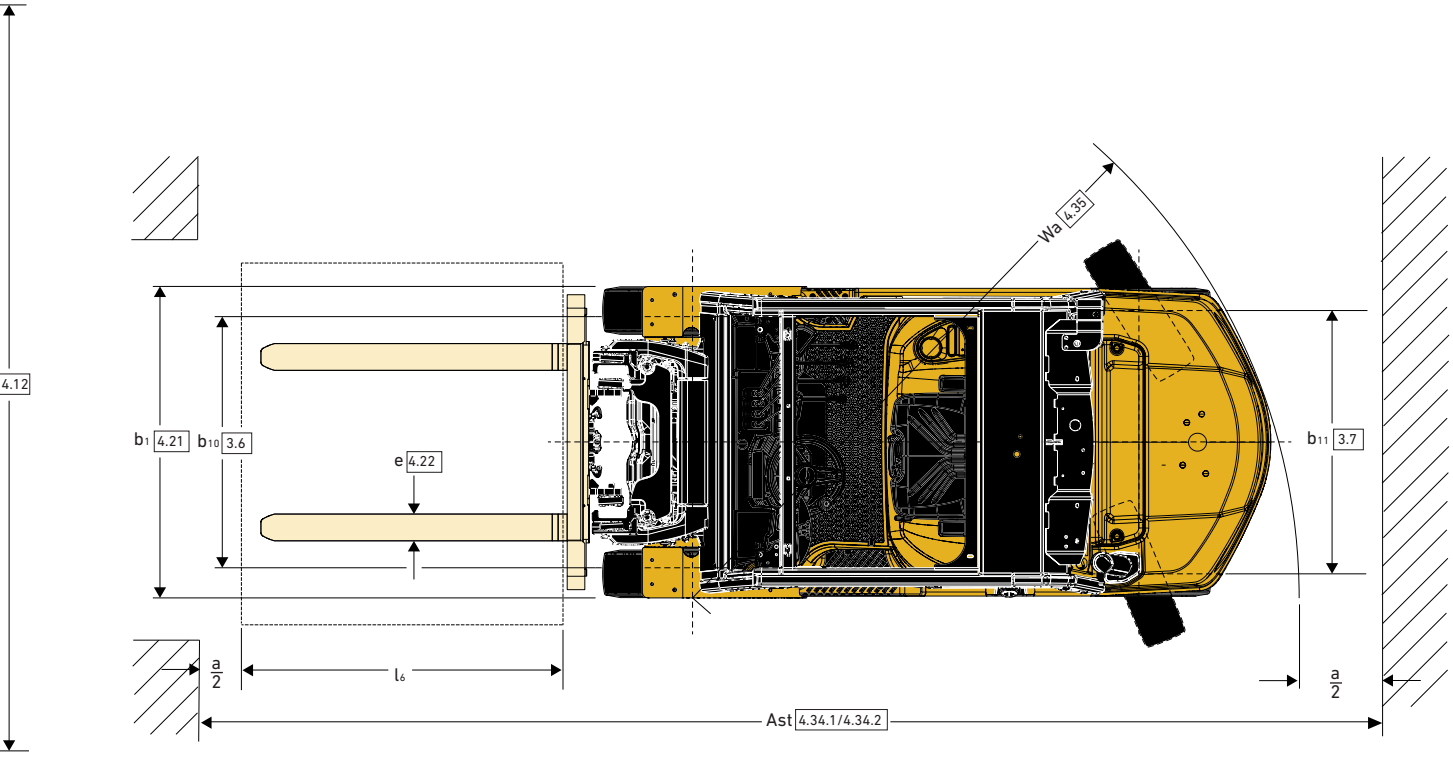
4.12
b1 4.21
b10 3.6
e 4.22
Wa 4.35
b11 3.7
a/2
l6
a/2
Ast 4.34.1/4.34.2

GDP/GLP2.0N mast details and capacity ratings (kg) - 500mm Load Centre

Mast type	Maximum Fork Height (TOF) (mm)	Lowered Height (mm)	Extended Height without LBR (mm)	Extended Height with LBR (1220mm) (mm)	Free Lift Height with LBR (BOF) (mm)	Back Tilt (deg.)	Capacities (kg) @ 500mm Load Centre			
							Super Elastic Tyres		Pneumatic Radial Tyres	
							Without sideshift (kg)	With sideshift + Fork Positioner (kg)	Without sideshift (kg)	With sideshift + Fork Positioner (kg)
							2.0N	2.0N	2.0N	2.0N
2 Stage LFL	2960	2020	3570	3875	50	6	2000	2000	2000	2000
	3260	2170	3870	4175	50	6	2000	2000	2000	2000
	3560	2320	4170	4475	50	6	2000	2000	2000	2000
	3900	2570	4510	4815	50	6	2000	2000	2000	2000
	4200	2720	4810	5115	50	6	2000	2000	2000	2000
	4500	2870	5110	5415	50	6	1980	1980	1980	1980
	4800	3020	5410	5715	50	6	1920	1910	1920	1910
	5000	3220	5610	5915	50	6	1880	1860	1880	1860
	5500	3470	6110	6415	50	6	1770	1750	1650	1640
2 Stage FFL	2990	2020	3597	3905	1373	6	2000	2000	2000	2000
	3340	2170	3947	4560	1523	6	2000	2000	2000	2000
	3440	2220	4047	4660	1573	6	2000	2000	2000	2000
	3540	2270	4147	4760	1623	6	2000	2000	2000	2000
	3740	2370	4347	4960	1723	6	2000	2000	2000	2000
	4060	2570	4667	5280	1923	6	2000	1970	2000	1970
	4560	2820	5167	5780	2173	6	1960	1960	1960	1960
	4960	3020	5567	6180	2373	6	1880	1870	1880	1870
	5560	3370	6167	6780	2723	6	1750	1730	1660	1650
3 Stage FFL	4100	2020	4699	5015	1381	6	2000	1970	2000	1970
	4400	2020	4999	5315	1381	6	2000	1970	2000	1970
	4650	2070	5249	5565	1431	6	1950	1920	1860	1840
	4950	2170	5549	5865	1531	6	1890	1860	1680	1670
	5250	2320	5849	6165	1681	6	1830	1810	1540	1520
	6150	2670	6749	7065	2031	6	1550	1540	1120	1100
	6450	2820	7049	7365	2181	6	1400	1380	1010	980
	6900	3020	7499	7815	2381	6	1210	1190	840	810

GDP/GLP2.0N mast details and capacity ratings (kg) - 600mm Load Centre

Mast type	Maximum Fork Height (TOF) (mm)	Lowered Height (mm)	Extended Height without LBR (mm)	Extended Height with LBR (1220mm) (mm)	Free Lift Height with LBR (BOF) (mm)	Back Tilt (deg.)	Capacities (kg) @ 600mm Load Centre			
							Super Elastic Tyres		Pneumatic Radial Tyres	
							Without sideshift (kg)	With sideshift + Fork Positioner (kg)	Without sideshift (kg)	With sideshift + Fork Positioner (kg)
							2.0N	2.0N	2.0N	2.0N
2 Stage LFL	2960	2020	3570	3875	50	6	1910	1850	1910	1850
	3260	2170	3870	4175	50	6	1900	1840	1900	1840
	3560	2320	4170	4475	50	6	1900	1840	1900	1840
	3900	2570	4510	4815	50	6	1890	1830	1890	1830
	4200	2720	4810	5115	50	6	1880	1820	1880	1820
	4500	2870	5110	5415	50	6	1860	1800	1860	1800
	4800	3020	5410	5715	50	6	1800	1740	1800	1740
	5000	3220	5610	5915	50	6	1750	1690	1750	1690
	5500	3470	6110	6415	50	6	1640	1590	1640	1580
2 Stage FFL	2990	2020	3597	4210	1373	6	1910	1850	1910	1850
	3340	2170	3947	4560	1523	6	1900	1840	1900	1840
	3440	2220	4047	4660	1573	6	1900	1840	1900	1840
	3540	2270	4147	4760	1623	6	1900	1840	1900	1840
	3740	2370	4347	4960	1723	6	1890	1830	1890	1830
	4060	2570	4667	5280	1923	6	1890	1820	1890	1820
	4560	2820	5167	5780	2173	6	1840	1780	1840	1780
	4960	3020	5567	6180	2373	6	1760	1700	1760	1700
	5560	3370	6167	6780	2723	6	1620	1570	1620	1560
3 Stage FFL	4100	2020	4699	5015	1381	6	1850	1790	1850	1790
	4400	2020	4999	5315	1381	6	1850	1790	1850	1790
	4650	2070	5249	5565	1431	6	1810	1750	1810	1750
	4950	2170	5549	5865	1531	6	1750	1690	1680	1670
	5250	2320	5849	6165	1681	6	1700	1640	1540	1520
	6150	2670	6749	7065	2031	6	1480	1430	1120	1100
	6450	2820	7049	7365	2181	6	1400	1360	1010	980
	6900	3020	7499	7815	2381	6	1210	1190	840	810

GDP/GLP2.5N mast details and capacity ratings (kg) - 500mm Load Centre

Mast type	Maximum Fork Height (TOF) (mm)	Lowered Height (mm)	Extended Height without LBR (mm)	Extended Height with LBR (1220mm) (mm)	Free Lift Height with LBR (BOF) (mm)	Back Tilt (deg.)	Capacities (kg) @ 500mm Load Centre			
							Super Elastic Tyres		Pneumatic Radial Tyres	
							Without sideshift (kg)	With sideshift + Fork Positioner (kg)	Without sideshift (kg)	With sideshift + Fork Positioner (kg)
							2.5N	2.5N	2.5N	2.5N
2 Stage LFL	2960	2020	3570	4180	50	6	2500	2500	2500	2500
	3260	2170	3870	4480	50	6	2500	2500	2500	2500
	3560	2320	4170	4780	50	6	2500	2450	2500	2450
	3900	2570	4510	5120	50	6	2500	2440	2500	2440
	4200	2720	4810	5420	50	6	2500	2430	2500	2430
	4500	2870	5110	5720	50	6	2470	2410	2470	2410
	4800	3020	5410	6020	50	6	2410	2340	2230	2230
	5000	3220	5610	6220	50	6	2360	2280	2050	2050
	5500	3470	6110	6720	50	6	2240	2160	1650	1640
2 Stage FFL	2990	2020	3597	4210	1373	6	2500	2460	2500	2460
	3340	2170	3947	4560	1523	6	2500	2460	2500	2460
	3440	2220	4047	4660	1573	6	2500	2450	2500	2450
	3540	2270	4147	4760	1623	6	2500	2450	2500	2450
	3740	2370	4347	4960	1723	6	2500	2450	2500	2450
	4060	2570	4667	5280	1923	6	2500	2440	2500	2440
	4560	2820	5167	5780	2173	6	2460	2390	2450	2380
	4960	3020	5567	6180	2373	6	2370	2290	2140	2130
	5560	3370	6167	6780	2723	6	2220	2140	1660	1650
3 Stage FFL	4000	2020	4599	5220	1381	6	2500	2500	2500	2500
	4100	2020	4699	5320	1381	6	2500	2430	2420	2410
	4300	2020	4899	5520	1381	6	2500	2430	2290	2275
	4650	2070	5249	5870	1431	6	2440	2380	1950	1950
	4950	2170	5549	6170	1531	6	2380	2310	1740	1720
	5100	2270	5699	6320	1631	6	2295	2260	1645	1625
	5550	2420	6149	6770	1781	6	2050	2050	1400	1400
	5700	2520	6299	6920	1881	6	1815	1815	1225	1220
	6150	2670	6749	7370	2031	6	1580	1580	1050	1040
	6450	2820	7049	7670	2181	6	1410	1390	920	890
	6900	3020	7499	8120	2381	6	1170	1140	740	700

GDP/GLP2.5N mast details and capacity ratings (kg) - 600mm Load Centre

Mast type	Maximum Fork Height (TOF) (mm)	Lowered Height (mm)	Extended Height without LBR (mm)	Extended Height with LBR (1220mm) (mm)	Free Lift Height with LBR (BOF) (mm)	Back Tilt (deg.)	Capacities (kg) @ 600mm Load Centre			
							Super Elastic Tyres		Pneumatic Radial Tyres	
							Without sideshift (kg)	With sideshift + Fork Positioner (kg)	Without sideshift (kg)	With sideshift + Fork Positioner (kg)
							2.5N	2.5N	2.5N	2.5N
2 Stage LFL	2960	2020	3570	4180	50	6	2310	2240	2310	2240
	3260	2170	3870	4480	50	6	2360	2290	2360	2290
	3560	2320	4170	4780	50	6	2300	2230	2300	2230
	3900	2570	4510	5120	50	6	2290	2220	2290	2220
	4200	2720	4810	5420	50	6	2280	2210	2280	2210
	4500	2870	5110	5720	50	6	2260	2190	2260	2190
	4800	3020	5410	6020	50	6	2190	2120	2190	2120
	5000	3220	5610	6220	50	6	2140	2070	2050	2050
	5500	3470	6110	6720	50	6	2030	1960	1650	1640
2 Stage FFL	2990	2020	3597	4210	1373	6	2310	2240	2310	2240
	3340	2170	3947	4560	1523	6	2300	2230	2300	2230
	3440	2220	4047	4660	1573	6	2300	2230	2300	2230
	3540	2270	4147	4760	1623	6	2300	2230	2300	2230
	3740	2370	4347	4960	1723	6	2290	2220	2290	2220
	4060	2570	4667	5280	1923	6	2290	2210	2290	2210
	4560	2820	5167	5780	2173	6	2240	2170	2240	2170
	4960	3020	5567	6180	2373	6	2150	2080	2140	2080
	5560	3370	6167	6780	2723	6	2010	1940	1660	1650
3 Stage FFL	4000	2020	4599	5220	1381	6	2280	2210	2280	2210
	4100	2020	4699	5320	1381	6	2280	2210	2280	2210
	4300	2020	4899	5520	1381	6	2280	2210	2215	2175
	4650	2070	5249	5870	1431	6	2230	2160	1950	1940
	4950	2170	5549	6170	1531	6	2170	2100	1740	1720
	5100	2270	5699	6320	1631	6	2130	2065	1645	1625
	5550	2420	6149	6770	1781	6	1950	1950	1400	1380
	5700	2520	6299	6920	1881	6	1765	1765	1225	1210
	6150	2670	6749	7370	2031	6	1580	1580	1050	1040
	6450	2820	7049	7670	2181	6	1410	1390	920	890
	6900	3020	7499	8120	2381	6	1170	1140	740	700

GDP/GLP2.5N6 mast details and capacity ratings (kg) - 500mm Load Centre

Mast type	Maximum Fork Height (TOF) (mm)	Lowered Height (mm)	Extended Height without LBR (mm)	Extended Height with LBR (1220mm) (mm)	Free Lift Height with LBR (BOF) (mm)	Back Tilt (deg.)	Capacities (kg) @ 500mm Load Centre			
							Super Elastic Tyres		Pneumatic Radial Tyres	
							Without sideshift (kg)	With sideshift + Fork Positioner (kg)	Without sideshift (kg)	With sideshift + Fork Positioner (kg)
							2.5N6	2.5N6	2.5N6	2.5N6
2 Stage LFL	2960	2020	3570	4180	50	6	2700	2700	2700	2700
	3260	2170	3870	4480	50	6	2700	2700	2700	2700
	3560	2320	4170	4780	50	6	2700	2700	2700	2700
	3900	2570	4510	5120	50	6	2700	2690	2700	2690
	4200	2720	4810	5420	50	6	2700	2680	2700	2680
	4500	2870	5110	5720	50	6	2680	2660	2670	2660
	4800	3020	5410	6020	50	6	2610	2590	2560	2560
	5000	3220	5610	6220	50	6	2570	2540	2360	2350
	5500	3470	6110	6720	50	6	2450	2410	1900	1880
2 Stage FFL	2990	2020	3597	4210	1373	6	2700	2700	2700	2700
	3340	2170	3937	4255	1523	6	2700	2700	2700	2700
	3440	2220	4037	4355	1573	6	2700	2700	2700	2700
	3540	2270	4137	4455	1623	6	2700	2700	2700	2700
	3740	2370	4337	4655	1723	6	2700	2700	2700	2700
	4060	2570	4657	4975	1923	6	2700	2690	2700	2690
	4560	2820	5157	5475	2173	6	2660	2640	2650	2640
	4960	3020	5557	5875	2373	6	2570	2450	2450	2550
	5560	3370	6157	6475	2723	6	2430	2390	1900	1890
3 Stage FFL	4000	2020	4599	5220	1381	6	2700	2680	2700	2700
	4100	2020	4699	5320	1381	6	2700	2680	2700	2680
	4300	2020	4899	5520	1381	6	2700	2680	2575	2560
	4650	2070	5249	5870	1431	6	2640	2360	2220	2220
	4950	2170	5549	6170	1531	6	2500	2510	1980	1970
	5100	2270	5699	6320	1631	6	2370	2375	1865	1855
	5550	2420	6149	6770	1781	6	2070	2070	1530	1600
	5700	2520	6299	6920	1881	6	1860	1550	1355	1375
	6150	2670	6749	7370	2031	6	1650	1550	1180	1150
	6450	2820	7049	7670	2181	6	1560	1325	1180	1150
	6900	3020	7499	8120	2381	6	1120	1100	830	790

GDP/GLP2.5N6 mast details and capacity ratings (kg) - 600mm Load Centre

Mast type	Maximum Fork Height (TOF) (mm)	Lowered Height (mm)	Extended Height without LBR (mm)	Extended Height with LBR (1220mm) (mm)	Free Lift Height with LBR (BOF) (mm)	Back Tilt (deg.)	Capacities (kg) @ 600mm Load Centre			
							Super Elastic Tyres		Pneumatic Radial Tyres	
							Without sideshift (kg)	With sideshift + Fork Positioner (kg)	Without sideshift (kg)	With sideshift + Fork Positioner (kg)
							2.5N6	2.5N6	2.5N6	2.5N6
2 Stage LFL	2960	2020	3570	4180	50	6	2530	2470	2530	2470
	3260	2170	3870	4480	50	6	2530	2460	2530	2460
	3560	2320	4170	4780	50	6	2530	2460	2530	2460
	3900	2570	4510	5120	50	6	2520	2450	2520	2450
	4200	2720	4810	5420	50	6	2520	2440	2520	2440
	4500	2870	5110	5720	50	6	2490	2420	2490	2420
	4800	3020	5410	6020	50	6	2430	2350	2430	2350
	5000	3220	5610	6220	50	6	2380	2300	2360	2300
	5500	3470	6110	6720	50	6	2260	2190	1900	1880
2 Stage FFL	2990	2020	3597	4210	1373	6	2530	2470	2530	2240
	3340	2170	3937	4255	1523	6	2530	2460	2530	2230
	3440	2220	4037	4355	1573	6	2530	2460	2530	2230
	3540	2270	4137	4455	1623	6	2530	2460	2530	2230
	3740	2370	4337	4655	1723	6	2530	2450	2530	2220
	4060	2570	4657	4975	1923	6	2520	2450	2520	2210
	4560	2820	5157	5475	2173	6	2470	2400	2470	2170
	4960	3020	5557	5875	2373	6	2390	2310	2380	2080
	5560	3370	6157	6475	2723	6	2240	2170	1900	1650
3 Stage FFL	4000	2020	4599	5220	1381	6	2510	2440	2510	2440
	4100	2020	4699	5320	1381	6	2510	2440	2510	2440
	4300	2020	4899	5520	1381	6	2510	2440	2475	2440
	4650	2070	5249	5870	1431	6	2470	2390	2220	2220
	4950	2170	5549	6170	1531	6	2400	2320	1980	1970
	5100	2270	5699	6320	1631	6	2320	2280	1865	1855
	5550	2420	6149	6770	1781	6	2020	2020	1575	1560
	5700	2520	6299	6920	1881	6	1800	1800	1400	1380
	6150	2670	6749	7370	2031	6	1560	1550	1180	1150
	6450	2820	7049	7670	2181	6	1560	1550	1180	1150
	6900	3020	7499	8120	2381	6	1120	1100	830	970

GDP/GLP3.0N mast details and capacity ratings (kg) - 500mm Load Centre

Mast type	Maximum Fork Height (TOF) (mm)	Lowered Height (mm)	Extended Height without LBR (mm)	Extended Height with LBR (1220mm) (mm)	Free Lift Height with LBR (BOF) (mm)	Back Tilt (deg.)	Capacities (kg) @ 500mm Load Centre			
							Super Elastic Tyres		Pneumatic Radial Tyres	
							Without sideshift (kg)	With sideshift + Fork Positioner (kg)	Without sideshift (kg)	With sideshift + Fork Positioner (kg)
							3.0N	3.0N	3.0N	3.0N
2 Stage LFL	2980	2142	3662	4198	50	6	3000	2920	3000	2920
	3280	2292	3962	4498	50	6	3000	2920	3000	2920
	3380	2342	4062	4598	50	6	3000	2910	3000	2910
	3580	2442	4262	4798	50	6	3000	2910	3000	2910
	3880	2692	4562	5098	50	6	3000	2900	3000	2900
	4180	2842	4862	5398	50	6	3000	2890	3000	2890
	4480	2992	5162	5698	50	6	2930	2830	2920	2820
	4780	3242	5462	5998	50	6	2870	2750	2580	2580
	5480	3592	6162	6698	50	6	2660	2580	1860	1850
	5880	3892	6562	7098	50	6	2210	2220	1490	1480
2 Stage FFL	3000	2092	3684	4224	1362	6	3000	2940	3000	2940
	3200	2192	3884	4424	1462	6	3000	2940	3000	2940
	3500	2342	4184	4724	1612	6	3000	2930	3000	2930
	3700	2442	4384	4924	1712	6	3000	2930	3000	2930
	4000	2642	4684	5224	1912	6	3000	2920	3000	2920
	4500	2892	5184	5724	2162	6	2930	2840	2930	2840
	5000	3192	5684	6224	2462	6	2820	2720	2480	2470
	5400	3392	6084	6624	2662	6	2720	2620	2080	2060
3 Stage FFL	4020	2042	4690	5238	1320	6	3000	2900	2930	2900
	4320	2092	4990	5538	1370	6	2970	2870	2590	2580
	4620	2192	5290	5838	1470	6	2900	2800	2290	2280
	4920	2342	5590	6138	1620	6	2650	2660	2020	2010
	5520	2592	6190	6738	1870	6	2070	2070	1530	1510
	6120	2842	6790	7338	2120	6	1580	1570	1130	1100
	6570	3042	7240	7788	2320	6	1260	1240	880	850
	7020	3192	7690	8238	2470	6	990	960	670	630

GDP/GLP3.0N mast details and capacity ratings (kg) - 600mm Load Centre

Mast type	Maximum Fork Height (TOF) (mm)	Lowered Height (mm)	Extended Height without LBR (mm)	Extended Height with LBR (1220mm) (mm)	Free Lift Height with LBR (BOF) (mm)	Back Tilt (deg.)	Capacities (kg) @ 600mm Load Centre			
							Super Elastic Tyres		Pneumatic Radial Tyres	
							Without sideshift (kg)	With sideshift + Fork Positioner (kg)	Without sideshift (kg)	With sideshift + Fork Positioner (kg)
							3.0N	3.0N	3.0N	3.0N
2 Stage LFL	2980	2142	3662	4198	50	6	2770	2660	2770	2660
	3280	2292	3962	4498	50	6	2770	660	2770	2660
	3380	2342	4062	4598	50	6	2770	2650	2770	2660
	3580	2442	4262	4798	50	6	2760	2650	2760	2650
	3880	2692	4562	5098	50	6	2750	2640	2750	2640
	4180	2842	4862	5398	50	6	2740	2630	2740	2630
	4480	2992	5162	5698	50	6	2680	2570	2680	2570
	4780	3242	5462	5998	50	6	2610	2510	2580	2500
	5480	3592	6162	6698	50	6	2450	2350	1860	1850
	5880	3892	6562	7098	50	6	2210	2220	1490	1480
2 Stage FFL	3000	2092	3684	4224	1362	6	2770	2680	2770	2680
	3200	2192	3884	4424	1462	6	2770	2670	2770	2670
	3500	2342	4184	4724	1612	6	2760	2670	2760	2670
	3700	2442	4384	4924	1712	6	2760	2660	2760	2660
	4000	2642	4684	5224	1912	6	2750	2660	2750	2660
	4500	2892	5184	5724	2162	6	2680	2590	2680	2590
	5000	3192	5684	6224	2462	6	2570	2720	2480	2470
	5400	3392	6084	6624	2662	6	2470	2390	2080	2060
3 Stage FFL	4020	2042	4690	5238	1320	6	2740	2640	2740	2640
	4320	2092	4990	5538	1370	6	2710	2620	2580	2560
	4620	2192	5290	5838	1470	6	2640	2550	2290	2270
	4920	2342	5590	6138	1620	6	2580	2490	2020	2000
	5520	2592	6190	6738	1870	6	2070	2070	1530	1510
	6120	2842	6790	7338	2120	6	1580	1570	1130	1100
	6570	3042	7240	7788	2320	6	1260	1240	880	850
	7020	3192	7690	8238	2470	6	990	960	670	630

GDP/GLP3.5N mast details and capacity ratings (kg) - 500mm Load Centre

Mast type	Maximum Fork Height (TOF) (mm)	Lowered Height (mm)	Extended Height without LBR (mm)	Extended Height with LBR (1220mm) (mm)	Free Lift Height with LBR (BOF) (mm)	Back Tilt (deg.)	Capacities (kg) @ 500mm Load Centre			
							Super Elastic Tyres		Pneumatic Radial Tyres	
							Without sideshift (kg)	With sideshift + Fork Positioner (kg)	Without sideshift (kg)	With sideshift + Fork Positioner (kg)
							3.5N	3.5N	3.5N	3.5N
2 Stage LFL	2980	2142	3662	4198	50	6	3500	3460	3500	3460
	3280	2292	3962	4498	50	6	3500	3460	3500	3460
	3380	2342	4062	4598	50	6	3500	3450	3500	3450
	3580	2442	4262	4798	50	6	3500	3450	3500	3450
	3880	2692	4562	5098	50	6	3500	3440	3500	3440
	4180	2842	4862	5398	50	6	3500	3430	3500	3430
	4480	2992	5162	5698	50	6	2930	3360	3100	3100
	4780	3242	5462	5998	50	6	2870	2380	2700	2710
	5480	3592	6162	6698	50	6	2660	2900	1870	1870
	5880	3892	6562	7098	50	6	2210	2350	1430	1430
2 Stage FFL	3000	2092	3684	4224	1362	6	3500	3420	3500	3420
	3200	2192	3884	4424	1462	6	3500	3420	3500	3420
	3500	2342	4184	4724	1612	6	3500	3410	3500	3410
	3700	2442	4384	4924	1712	6	3500	3410	3500	3410
	4000	2642	4684	5224	1912	6	3500	3400	3500	3400
	4500	2892	5184	5724	2162	6	3430	3320	3100	3090
	5000	3192	5684	6224	2462	6	3310	3190	2460	2450
	5400	3392	6084	6624	2662	6	3020	3030	1990	1980
3 Stage FFL	4020	2042	4690	5238	1320	6	3500	3420	3130	3110
	4320	2092	4990	5538	1370	6	3460	3390	2750	2740
	4620	2192	5290	5838	1470	6	3270	3280	2400	2400
	4920	2342	5590	6138	1620	6	2890	2890	2090	2080
	5520	2592	6190	6738	1870	6	2200	2190	1530	1520
	6120	2842	6790	7338	2120	6	1620	1600	1090	1050
	6570	3042	7240	7788	2320	6	1240	1220	810	770
	7020	3192	7690	8238	2470	6	940	900	580	540

GDP/GLP3.5N mast details and capacity ratings (kg) - 600mm Load Centre

Mast type	Maximum Fork Height (TOF) (mm)	Lowered Height (mm)	Extended Height without LBR (mm)	Extended Height with LBR (1220mm) (mm)	Free Lift Height with LBR (BOF) (mm)	Back Tilt (deg.)	Capacities (kg) @ 600mm Load Centre			
							Super Elastic Tyres		Pneumatic Radial Tyres	
							Without sideshift (kg)	With sideshift + Fork Positioner (kg)	Without sideshift (kg)	With sideshift + Fork Positioner (kg)
							3.5N	3.5N	3.5N	3.5N
2 Stage LFL	2980	2142	3662	4198	50	6	3280	3150	3280	3150
	3280	2292	3962	4498	50	6	3270	3150	3270	3150
	3380	2342	4062	4598	50	6	3270	3150	3270	3150
	3580	2442	4262	4798	50	6	3270	3140	3270	3140
	3880	2692	4562	5098	50	6	3250	3130	3250	3130
	4180	2842	4862	5398	50	6	3250	3120	3250	3120
	4480	2992	5162	5698	50	6	3180	3060	3080	3060
	4780	3242	5462	5998	50	6	3110	2990	2700	2690
	5480	3592	6162	6698	50	6	2870	2820	1870	1870
	5880	3892	6562	7098	50	6	2330	2350	1430	1430
2 Stage FFL	3000	2092	3684	4224	1362	6	3220	3110	3220	3110
	3200	2192	3884	4424	1462	6	3220	3110	3220	3110
	3500	2342	4184	4724	1612	6	3210	3110	3210	3110
	3700	2442	4384	4924	1712	6	3210	3100	3210	3100
	4000	2642	4684	5224	1912	6	3200	3090	3200	3090
	4500	2892	5184	5724	2162	6	3130	3020	3090	3020
	5000	3192	5684	6224	2462	6	3010	2910	2460	2450
	5400	3392	6084	6624	2662	6	2910	2810	1990	1980
3 Stage FFL	4020	2042	4690	5238	1320	6	3200	3120	3090	3080
	4320	2092	4990	5538	1370	6	3190	3090	2730	2720
	4620	2192	5290	5838	1470	6	3120	3020	2400	2390
	4920	2342	5590	6138	1620	6	2890	2890	2090	2080
	5520	2592	6190	6738	1870	6	2200	2190	1530	1520
	6120	2842	6790	7338	2120	6	1620	1600	1090	1050
	6570	3042	7240	7788	2320	6	1240	1220	810	770
	7020	3192	7690	8238	2470	6	940	900	580	540

List of Options

PERFORMANCE	STD	OPT
Yanmar 2.1L DPF (37kW) Diesel		X
Yanmar 2.1L DPF with CAC (44kW) Diesel		X
Yanmar 2.2L Certified LPG		X
Powershift Transmission	X	
Techtronix Transmission		X
Drum Brakes	X	
Oil immersed brakes		X
Standard (-20° C to 40° C) Environmental construction	X	
High Air Intake	X	
Heavy duty air intake and pre-cleaner options		X
Internal Air Intake		X
Fixed LPG bracket with Fabric strap		X
Swing Out and Drop Down LPG bracket with Fabric Strap		X
LPG tank bracket interlock		X
Integrated Fuel Level Sensor	X	
On-demand cooling system		X
Low Exhaust		X
Overhead Exhaust		X
System monitoring package		X
Premium monitoring package		X
Powertrain Protection with engine shutdown		X
Radiator Screen		X
Exhaust wraps		X
Empty seat engine shutdown		X
Hot ambient construction		X
DRIVE	**STD**	**OPT**
Single pedal inch brake	X	
Tyres - Super Elastic	X	
Tyres - Super Elastic - Premium		X
Tyres - Super Elastic - Premium - Non Marking		X
Tyres - Pneumatic Radial - Premium		X
Tyres - Pneumatic - Premium		X
Wide tread tyres		X
Dual tread tyres		X
Steer Column with Tilt and Telescope		X
Steering Column Mounted Directional Control	X	
Steering Wheel with Spinner Knob	X	
Steer Column with Infinitely Adjustable Tilt	X	
On Demand Power Steering	X	
On demand Power Steering with Synchronous Steering		X
LIFT	**STD**	**OPT**
2 Stage Limited Free Lift Mast – Class II/III	X	
2 Stage Full Free Lift Mast – Class II/III		X
3 Stage Full Free Lift Mast – Class II/III		X
2 Stage Limited Free Lift Mast - Class III - 3.0t	X	
2 Stage Full Free Lift Mast - Class III - 3.0t		X
3 Stage Full Free Lift Mast - Class III - 3.0t		X
6^0 Forward / 6^0 Back Mast Tilt	X	
10^0 Forward / 6^0 Back Mast Tilt		X
On Demand Hydraulic Pump (VDP)	X	
HANDLING	**STD**	**OPT**
Hook Type Standard Carriage - 1070mm	X	
Hook Type Standard Carriage - 1220mm		X
Hook Type Integral Sideshift Carriage - 1070mm		X
Hook Type Integral Sideshift Carriage - 1220mm		X
Hook Type Integral Sideshifting Fork Positioner - 1070mm		X
Hook Type Integral Sideshifting Fork Positioner - 1220mm		X
Type Standard Taper Forks 1000mm	X	
Type Standard Taper Forks 1100mm		X
Hook Type Standard Taper Forks 1200mm		X
Without Load backrest		X
1220mm High Load Backrest	X	
915mm High Load Backrest		X
915mm High Load Backrest Drop Centre		X
1524mm High Load Backrest		X
Tilt Cylinder Boots		X
Hydraulic Accumulator		X
Manual Lever Hydraulic Control	X	
Mini Lever Hydraulic Control		X
Joystick hydraulic control		X
High temperature hydraulic fluid		X

Clamping function		X
Return to set tilt function		X
2 Function (0 Auxiliary) Hydraulic Valve	X	
3 Function (1 Auxiliary) Hydraulic Valve		X
4 Function (2 Auxiliary) Hydraulic Valve		X
Auto Speed Hydraulics		X
Anti Chain Slack		X
Fork Laser Positioning System		X
Height Selector		X
Load Weight Display		X
VISIBILITY	**STD**	**OPT**
Dual Side View Mirrors		X
Panoramic Mirror		X
LED Work lights		X
High Performance LED Work lights		X
Rear reflector	X	
LED Rear light package Brake/Tail/Backup		X
LED Rear light package Brake/Tail/Backup/Turn		X
LED Rear light package Brake/Tail/Backup/Turn/Hazards		X
Switch Activated Strobe Light		X
Audible Reverse Alarm		X
Forward and Reverse Alarm		X
LED Mast Mounted lights		X
Blue LED Pedestrian Awareness Spotlights		X
Red LED Pedestrian Awareness Perimeter Lines		X
Rear View Camera System Integrated in 178mm Colour Display		X
ERGONOMICS	**STD**	**OPT**
Figure 8 Tube Over Head Guard	X	
Grid Style Overhead Guard	X	
Clear View Overhead Guard		X
Cabin Options (Partial, PVC, Steel Doors)		X
Rear Drive Handle with Horn Button		X
Console Tray	X	
127mm / 5" Colour Touchscreen Display	X	
178mm / 7" Colour Touchscreen Display		X
Full Suspension Vinyl Seat		X
Full Suspension Cloth Seat		X
Full Suspension Vinyl Seat - Value	X	
Air Ride Full Suspension Vinyl Seat		X
Air Ride Full Suspension Cloth Seat		X
Full suspension seat - Low profile		X
Sun Shades (top and / or front)		X
Air Conditioning		X
Accessory Mounting Post and options		X
12v Aux supply		X
12v Supply with twin USB charging sockets		X
OPERATION	**STD**	**OPT**
Key Switch Start	X	
Keyless with Operator password start		X
Engine driven cooling	X	
Travel speed Alarm		X
Battery disconnect		X
Front Mud Guards		X
Drive axle string cutter		X
Standard Seat Belt	X	
HI VIS Red Seat Belt		X
Telemetry Prepared	X	
Dynamic Stability System		X
Speed Reduction in Corners		X
Seat Side Direction Control		X
Foot Direction Control		X
Yale Vision Wireless Monitoring		X
Yale Vision Wireless Access		X
Yale Vision Wireless Verification		X
APPEARANCE	**STD**	**OPT**
Yale Gold paint base truck	X	
Special paint base truck		X
SUPPLEMENTAL	**STD**	**OPT**
24 Months / 4,000 Hours Warranty	X	
36 Months / 6,000 Hours Warranty		X
CE Certification	X	
Literature Pack	X	

About Yale®

Yale is a leading global manufacturer and supplier of high-quality counterbalance forklift trucks, warehouse equipment and fleet solutions. 'People, products and productivity' sums up our approach to the materials handling business. With over 140 years' experience, we are proud of our reputation as an innovative, forward-thinking manufacturer.

Yale dealerships provide flexible truck servicing solutions and are linked to one of the industry's most sophisticated parts distribution operations. You'll find support for Yale forklifts throughout the EMEA region – provided by a big regional footprint stretching through Europe, Middle East and Africa.

Materials handling for:

Automotive
Beverage
Chemical
Construction
Food
Logistics
Metals
Paper
Retail
Wood

Yale Europe Materials Handling
Centennial House, Frimley Business Park,
Frimley, Surrey GU16 7SG
United Kingdom
Tel: +44 (0) 1276 538500
Fax: +44 (0) 1276 538559
www.yale.com

10004925

Publication part no. 220991314 Rev.02 Printed in The Netherlands (0422HG) EN.
HYSTER-YALE UK LIMITED trading as Yale Europe Materials Handling.
Safety: This truck conforms to the current EU requirements.
Specification is subject to change without notice.
©2022 Yale. All rights reserved. YALE, and PEOPLE. PRODUCTS. PRODUCTIVITY. are trademarks of Hyster-Yale Group, Inc. is a registered copyright of Hyster-Yale Group, Inc.
Trucks shown with optional equipment. Country of Registration: England and Wales.
Company Registration Number: 02636775.