MS15XUX Platform Stacker Truck

1,500kg

Productivity

- Advanced AC control system
- Regenerative brake system
- Anti-pin button (Reverses truck to prevent user being pinned)
- Quick emergency disconnect (QED)
- Creep speed button (fine control with tiller arm in vertical position).

Dependability

- Multi-function display with Battery Discharge Indicator (BDI) including on-board diagnostics
- Damping cushion for low-noise operation
- Low center of gravity ensures the stable operation.

Serviceability

- Low voltage protection setting prolongs the battery usage
- CAN bus technology reduces wiring complexity and increase reliability
- Side battery extraction.

VDI 2198 – General Specifications

Distinguishing mark	1.1	Manufacturer		Yale	
	1.2	Manufacturer's type designition		**MS15XUX**	
	1.3	Drive: electric (battery or mains), diesel, petrol, fuel gas		Electric (battery)	
	1.4	Operator type: hand, pedestrian, standing, seated, order-picker		Standing	
	1.5	Rated load capacity/rated load	Q (kg)	1500	
	1.6	Load centre distance	c (mm)	600	
	1.8	Load distance, centre of drive axle to fork	x (mm)	672	
	1.9	Wheelbase	y (mm)	1378	
Weights	2.1	Service weight (with battery)	kg	1180 / 1205 / 1210 / 1130 / 1180 / 1300 / 1310	
	2.2	Axle loading, laden front/rear	mm	1830 / 1140	
	2.3	Axle loading, unladen front/rear	mm	1040 / 470	
Tyres/chassis	3.1	Tyres: polyurethane, topthane, Vulkollan®, front/rear		Polyurethane	
	3.2	Tyre size, front		Φ 250 × 70	
	3.3	Tyre size, rear		Φ 80 × 84	
	3.4	Addition wheel (dimensions)		Φ 150 × 60	
	3.5	Wheels, number front rear(x=driven wheels)		1X + 2/4	
	3.6	Tread, front	b_{10} (mm)	580	
	3.7	Tread, rear	b_{11} (mm)	404 / 530	
Dimensions	4.2	Height, mast lowered	h_1 (mm)	1735 / 1985 / 2135 / 2235 / 2050 / 2210 / 2410	
	4.3	Free lift (option 2500~3500mm)	h_2 (mm	1300 / 1550 / 1700 / 1800 / 1570 / 1740 / 1940	
	4.4	Max.lift height	h_3 (mm)	2500 / 3000 / 3300 / 3500 / 4500 / 5000 / 5600	
	4.5	Height, mast extended	h_4 (mm)	2955 / 3455 / 3755 / 3955 / 5030 / 5510 / 6110	
	4.6	Initial lift	h_5 (mm)	1150 / 1450	
	4.19	Overall length	l_1 (mm)	2020 / 2100	
	4.20	Length to face of forks	l_2 (mm)	950	
	4.21	Overall width	b_1 / b_1 (mm)	850	
	4.22	Fork dimensions	s/e/l (mm)	60 / 80 / 1070 (1150)	
	4.25	Width overall forks	b_5 (mm)	570 / 695	
	4.32	Ground clearance, centre of wheelbase	m_2 (mm)	31	
	4.34.1	Aisle width for pallets 1000 × 1200 crossways	Ast (mm)	2535	
	4.34.2	Aisle width for pallets 800×1200 crossways	Ast (mm)	2515	
	4.35	Turning radius	W_a (mm)	1655	
Performance data	5.1	Travel speed, laden/unladen	km/h	6.5 / 6.7	
	5.2	Lift speed, laden/unladen	km/h	0.11 / 0.14	
	5.3	Lowering speed, laden/unladen	m/s	0.12 / 0.12	
	5.7	Gradeability, laden/unladen	%	8 / 15	
	5.10	Service brake		Electromagnetic	
Electric engine	6.4	Battery voltage,nominal capacity K_5	V/Ah	24 / 240	24 / 300
	6.5	Battery weight	kg	220	260
		Battery compartment dimensions, l/w/h	mm	675 x 254 x 500	675 / 254 / 540
	10.7	Sound pressure level at the driver's seat	dB (A)	70	

Load Center

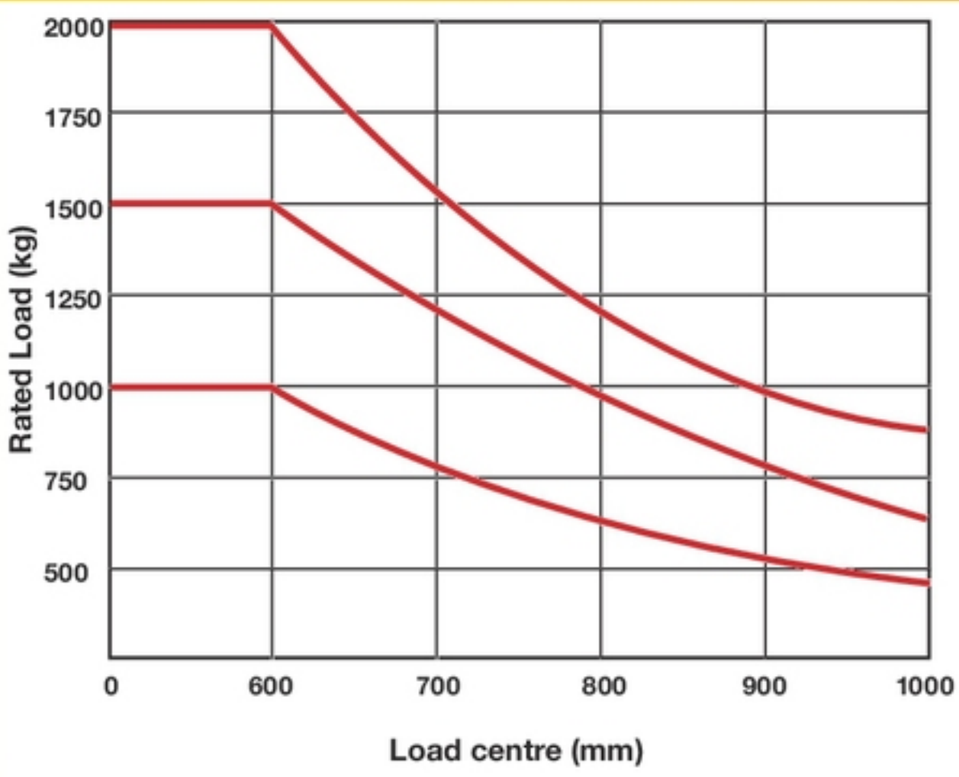

Load Capacity

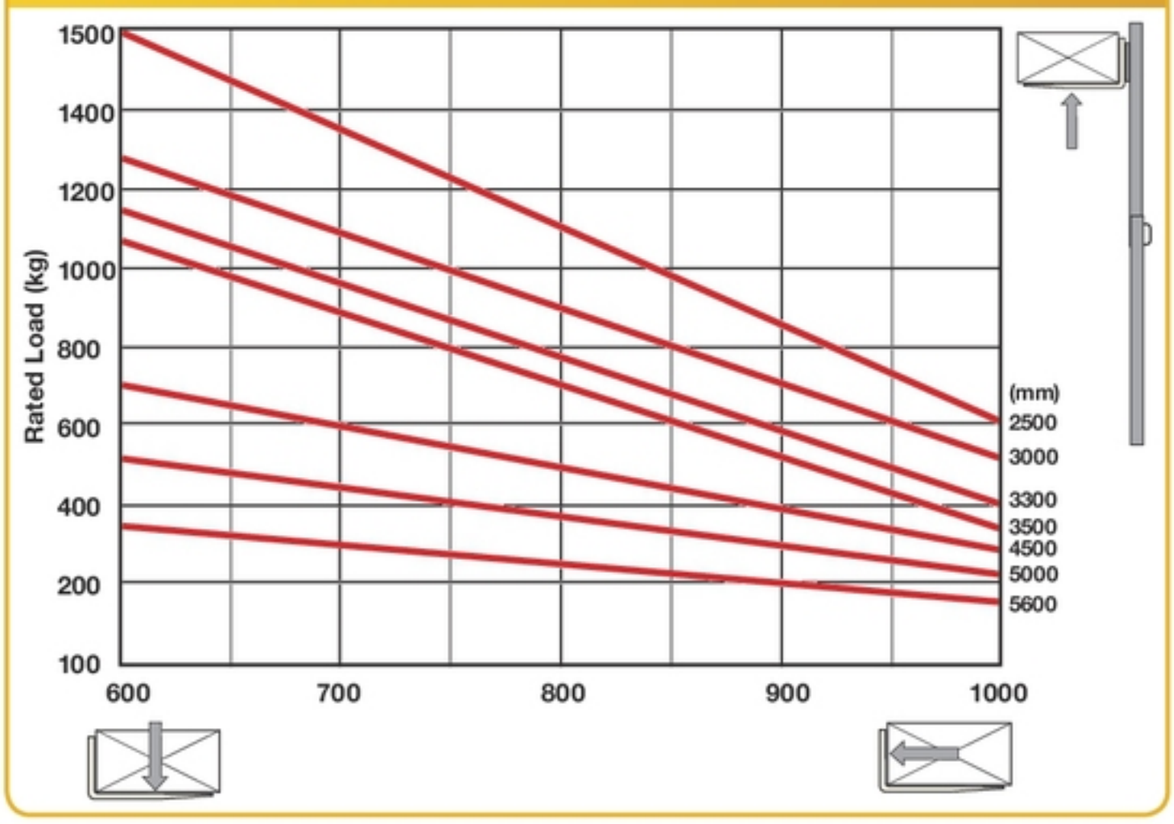
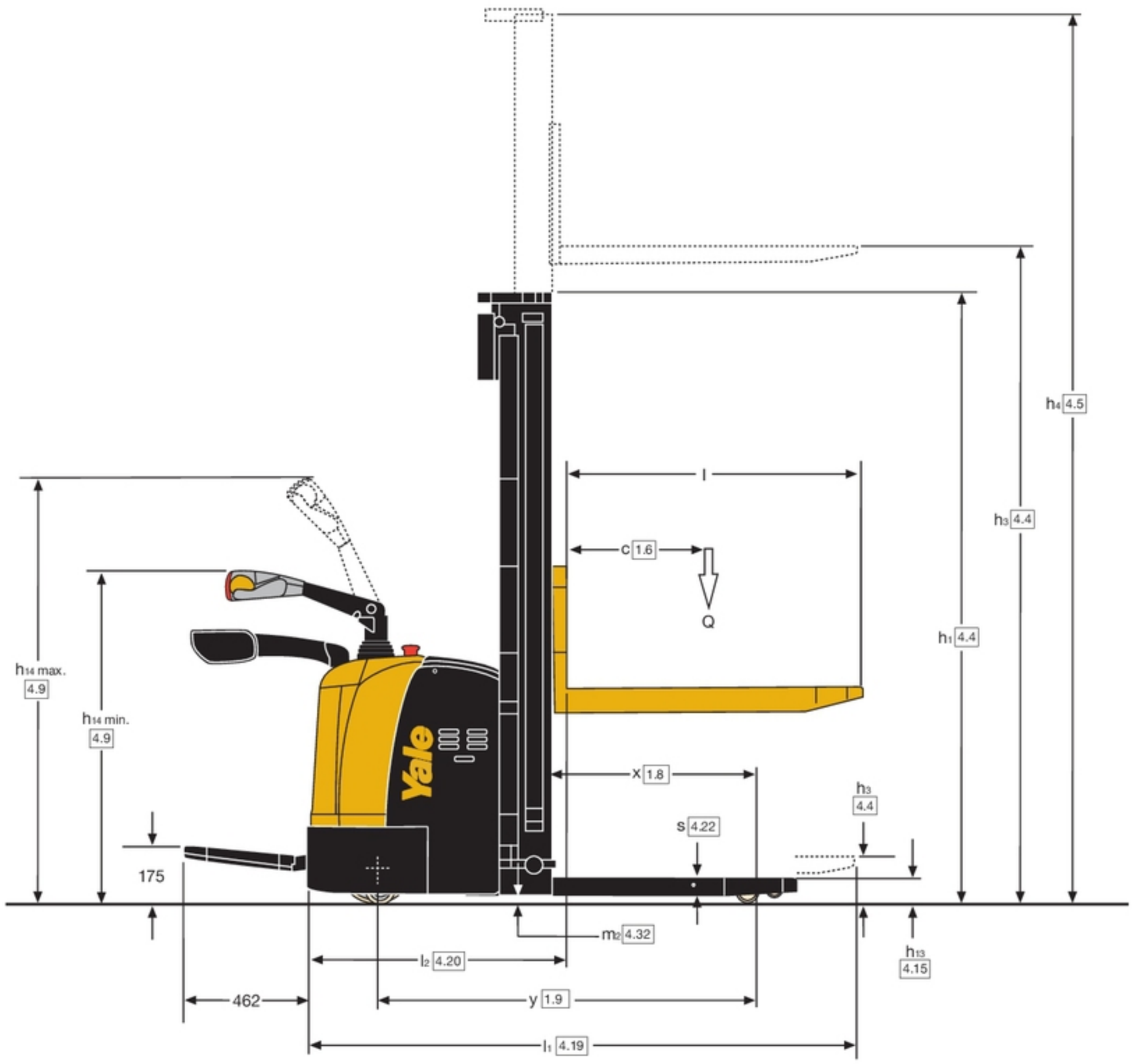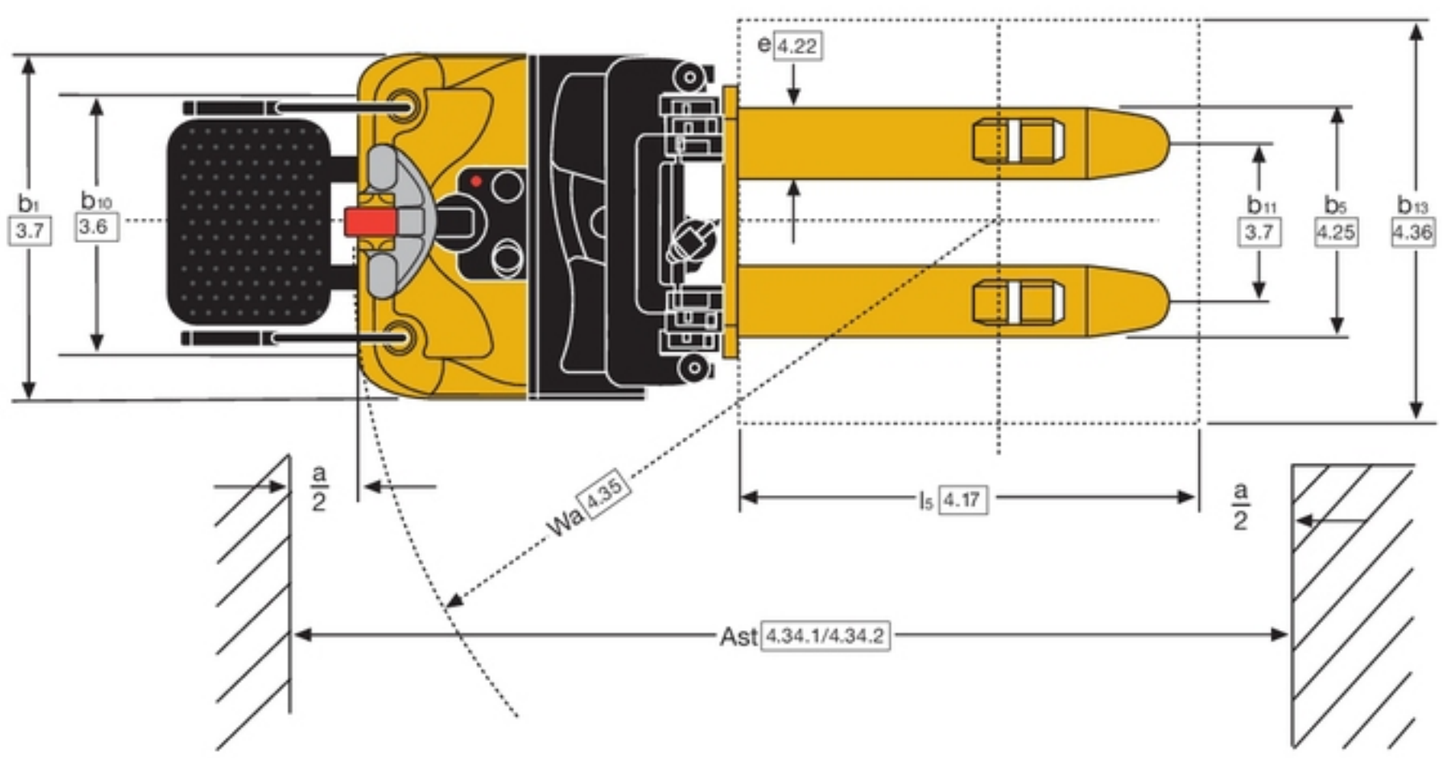
Truck Dimensions