VT series

Electric Forklift Trucks

1,500kg / 1,600kg / 1,800kg / 2,000kg

- YaleStop automatic park brake eliminates uncontrolled roll-back on ramps
- Oil-immersed brakes
- CANbus technology
- High-performance AC motor technology
- 2 battery choices: DIN and BS

VDI 2198 - General Specifications

Distinguishing mark	1.1	Manufacturer (abbreviation)		Yale	Yale	Yale
	1.2	Manufacturer's type designation		**ERP 15VT (SWB)**	**ERP 16VT (SWB)**	**ERP 16VT (MWB)**
	1.3	Drive: electric (battery or mains), diesel, petrol, fuel gas		Electric (battery)	Electric (battery)	Electric (battery)
	1.4	Operator type: hand, pedestrian, standing, seated, order-picker		Seated	Seated	Seated
	1.5	Rated capacity/rated load	Q (kg)	1500	1600	1600
	1.6	Load centre distance	c (mm)	500	500	500
	1.8	Load distance, centre of drive axle to fork	x (mm)	326	326	326
	1.9	Wheelbase	y (mm)	1290	1290	1386
Weights	2.1	Service weight	kg	2990	2990	3190
	2.2	Axle loading, laden front/rear	kg	3877 / 604	4013 / 540	4062 / 721
	2.3	Axle loading, unladen front/rear	kg	1416 / 1566	1491 / 1563	1506 / 1676
Tyres/chassis	3.1	Tyres: L = pneumatic, V = cushion, SE = superelastic		SE	SE	SE
	3.2	Tyre size, front		18 x 7-8	18 x 7-8	18 x 7-8
	3.3	Tyre size, rear		15 x 4.5-8	15 x 4.5-8	15 x 4.5-8
	3.5	Wheels, number front/rear (x = driven wheels)		2X / 2	2X / 2	2X / 2
	3.6	Tread, front	b10 (mm)	889	889	889
	3.7	Tread, rear	b11 (mm)	194	194	194
Dimensions	4.1	Tilt of mast/fork carriage forward/backward	α /β (°)	5 / 5	5 / 5	5 / 5
	4.2	Height of mast, lowered	h1 (mm)	2230	2230	2230
	4.3	Free lift ▼	h2 (mm)	100	100	100
	4.4	Lift ▼	h3 (mm)	3320	3320	3320
	4.5	Height, mast extended ✚	h4 (mm)	3898	3898	3898
	4.7	Height of overhead guard (cabin) ❍	h6 (mm)	2070	2070	2070
	4.8	Seat height/stand height ✘	h7 (mm)	919	919	919
	4.12	Coupling height	h10 (mm)	500	500	500
	4.19	Overall length	l1 (mm)	2805	2805	2901
	4.20	Length to face of forks	l2 (mm)	1805	1805	1901
	4.21	Overall width	b1/b2 (mm)	1050 ■	1050 ■	1050 ■
	4.22	Fork dimensions ISO2331	s/e/l (mm)	40 / 80 / 1000	40 / 80 / 1000	40 / 80 / 1000
	4.23	Fork carriage ISO 2328, class/type A,B		2A	2A	2A
	4.24	Fork carriage width ◗	b3 (mm)	907	907	907
	4.31	Ground clearance, laden, below mast	m1 (mm)	88	88	88
	4.32	Ground clearance, centre of wheelbase	m2 (mm)	100	100	100
	4.34.1	Aisle width for pallets 1000 x 1200 crossways	Ast (mm)	3131	3131	3230
	4.34.2	Aisle width for pallets 800 x 1200 lengthways	Ast (mm)	3254	3254	3353
	4.35	Turning radius	Wa (mm)	1476	1476	1575
	4.36	Internal turning radius	b13 (mm)	0	0	0
Performance data	5.1	Travel speed, laden/unladen ✪	km/h	16 / 16	16 / 16	16 / 16
	5.2	Lift speed, laden/unladen	m/s	0.43 / 0.59	0.43 / 0.59	0.43 / 0.59
	5.3	Lowering speed, laden/unladen	m/s	0.50 / 0.47	0.50 / 0.47	0.50 / 0.47
	5.5	Drawbar pull, laden/unladen	N	3406 / 3680	3406 / 3680	3406 / 3680
	5.6	Max. drawbar pull, laden/unladen	N	11415 / 11690	11415 / 11690	11415 / 11690
	5.7	Gradeability, laden/unladen	%	11 / 16	11 / 16	11 / 16
	5.8	Max. gradeability, laden/unladen	%	25 / 34	25 / 34	25 / 35
	5.9	Acceleration time, laden/unladen	s	4.6 / 4.1	4.6 / 4.1	4.6 / 4.1
	5.10	Service brake		Hydraulic	Hydraulic	Hydraulic
Electric-engine	6.1	Drive motor rating S2 60 min	kW	2 x 5.0	2 x 5.0	2 x 5.0
	6.2	Lift motor rating at S3 15%	kW	12	12	12
	6.3	Battery according to DIN 43531/35/36 A, B, C, no		DIN 43531-A	DIN 43531-A	DIN 43531-A
	6.4	Battery voltage/nominal capacity K5	(V)/(Ah)	48 / 500	48 / 500	48 / 625
	6.5	Battery weight	kg	673 - 743	673 - 743	813 - 899
	6.6	Energy consumption according to VDI cycle	kWh/h @ Nr of Cycles	4.8	4.8	5.1
	8.1	Type of drive unit				
Addition data	10.1	Operating pressure for attachments	bar	180	180	180
	10.2	Oil volume for attachments ❖	l/min	20-40	20-40	20-40
	10.7	Sound pressure level at the driver's seat ★	dB (A)	69	69	69
	10.8	Towing coupling, type DIN		Pin	Pin	Pin

★ L_{PAZ} ,measured according to the test cycles and based on the weighting values contained in EN12053
▼ Bottom of forks
✘ Full suspension seat specified. Standard hood specified. 953mm with raised hood.
✚ Without load backrest
◗ Add 32mm for load backrest
❍ h6 subject to +/- 5mm tolerance
❖ Maximum flow through dash display
✪ Extended shift off with e-hydraulics
■ Overall width 1116mm with required 200/50-10 tyres fitted for masts 5000mm and over.

Yale	Yale	Yale	Yale	Yale	1.1	Distinguishing mark
ERP 16VT (LWB)	**ERP 18VT (MWB)**	**ERP 18VT (LWB)**	**ERP 20VT (MWB)**	**ERP 20VT (LWB)**	1.2	
Electric (battery)	Electric (battery)	Electric (battery)	Electric (battery)	Electric (battery)	1.3	
Seated	Seated	Seated	Seated	Seated	1.4	
1600	1800	1800	2000	2000	1.5	
500	500	500	500	500	1.6	
326	321	321	321	321	1.8	
1494	1386	1494	1386	1494	1.9	
3210	3260	3280	3540	3290	2.1	Weights
4005 / 797	4449 / 606	4384 / 691	4895 / 635	4730 / 572	2.2	
1520 / 1682	1582 / 1673	1595 / 1680	1709 / 1822	1616 / 1674	2.3	
SE	SE	SE	SE	SE	3.1	Tyres/chassis
18 x 7-8	200 / 50-10	200 / 50-10	200 / 50-10	200 / 50-10	3.2	
15 x 4.5-8	15 x 4.5-8	15 x 4.5-8	15 x 4.5-8	15 x 4.5-8	3.3	
2X / 2	2X / 2	2X / 2	2X / 2	2X / 2	3.5	
889	908	908	908	908	3.6	
194	194	194	194	194	3.7	
5 / 5	5 / 5	5 / 5	5 / 5	5 / 5	4.1	Dimensions
2230	2180	2180	2180	2180	4.2	
100	100	100	100	100	4.3	
3320	3390	3390	3390	3390	4.4	
3898	4006	4006	4006	4006	4.5	
2070	2070	2070	2070	2070	4.7	
919	919	919	919	919	4.8	
500	500	500	500	500	4.12	
3004	2896	2999	2896	2999	4.19	
2004	1896	1999	1896	1999	4.20	
1050 ■	1116	1116	1116	1116	4.21	
40 / 80 / 1000	40 / 80 / 1000	40 / 80 / 1000	40 / 100 / 1000	40 / 100 / 1000	4.22	
2A	2A	2A	2A	2A	4.23	
907	977	977	977	977	4.24	
88	88	88	88	88	4.31	
100	100	100	100	100	4.32	
3331	3226	3327	3226	3327	4.33	
3454	3348	3449	3348	3449	4.34	
1676	1575	1676	1575	1676	4.35	
0	0	0	0	0	4.36	
16 / 16	16 / 16	16 / 16	16 / 16	16 / 16	5.1	Performance data
0.43 / 0.60	0.41 / 0.58	0.41 / 0.58	0.40 / 0.58	0.40 / 0.58	5.2	
0.50 / 0.48	0.46 / 0.40	0.46 / 0.50	0.47 / 0.40	0.47 / 0.40	5.3	
3406 / 3680	3337 / 3646	3337 / 3646	3260 / 3603	3294 / 3637	5.5	
11415 / 11690	11355 / 11664	11346 / 11655	11269 / 11612	11304 / 11647	5.6	
11 / 16	10 / 15	10 / 15	9 / 14	9 / 15	5.7	
25 / 35	23 / 35	23 / 36	31 / 34	22 / 36	5.8	
4.6 / 4.1	4.6 / 4.1	4.6 / 4.1	4.6 / 4.1	4.6 / 4.1	5.9	
Hydraulic	Hydraulic	Hydraulic	Hydraulic	Hydraulic	5.10	
2x 5.0	2x 5.0	2x 5.0	2x 5.0	2x 5.0	6.1	Electric-engine
12	12	12	12	12	6.2	
DIN 43531-A	DIN 43531-A	DIN 43531-A	DIN 43531-A	DIN 43531-A	6.3	
48 / 750	48 / 625	48 / 750	48 / 625	48 / 750	6.4	
962 / 1064	813 / 899	962 / 1064	813 / 899	962 / 1064	6.5	
5.1	5.3	5.4	5.8	5.6	6.6	
					8.1	Addition data
180	180	180	180	180	10.1	
20-40	20-40	20-40	20-40	20-40	10.2	
69	69	69	69	69	10.7	
Pin	Pin	Pin	Pin	Pin	10.8	

Spec sheet truck based on:
3360mm (Clear View) and 3430mm (Hi-Vis) to top of fork, 2 stage LFL mast with standard carriage and 1000mm forks, with HiP performance setting, DIN battery configuration.

Truck Dimensions

$$Ast = WA + R + a = Wa + \sqrt{((l_6 = x)^2 = (b_{12/2} - b_{13})^2} + a$$

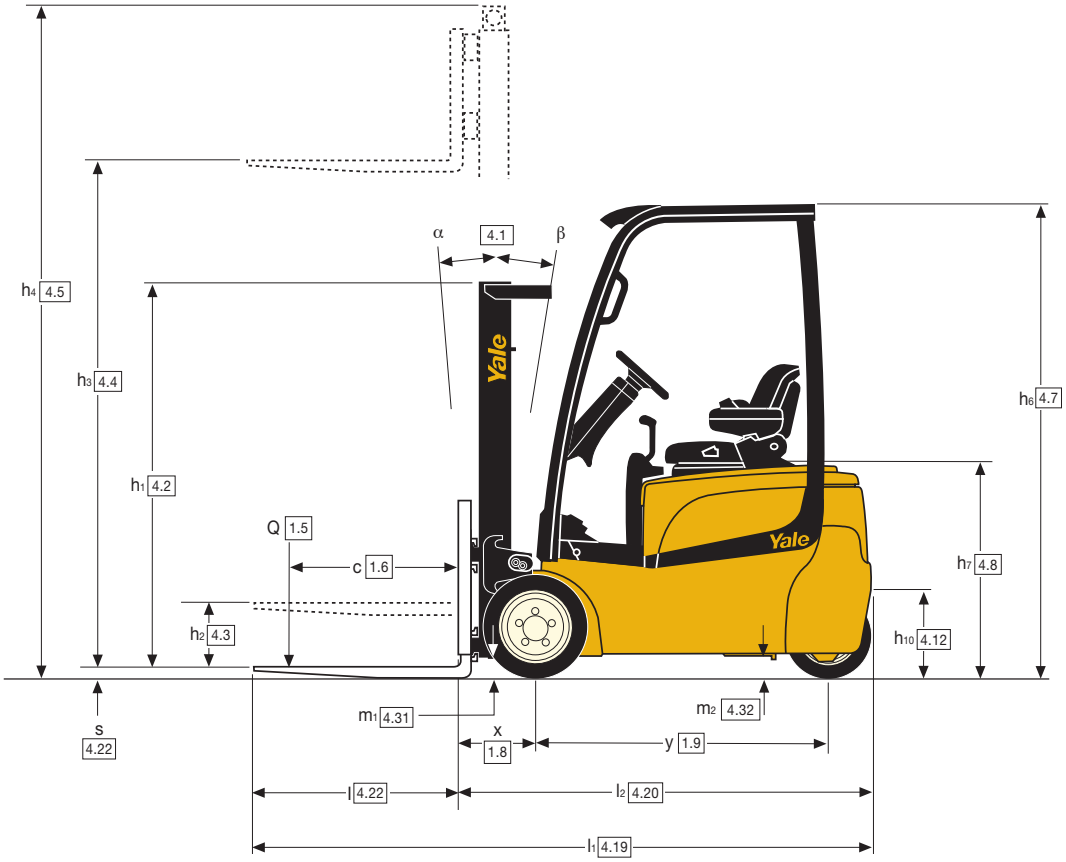

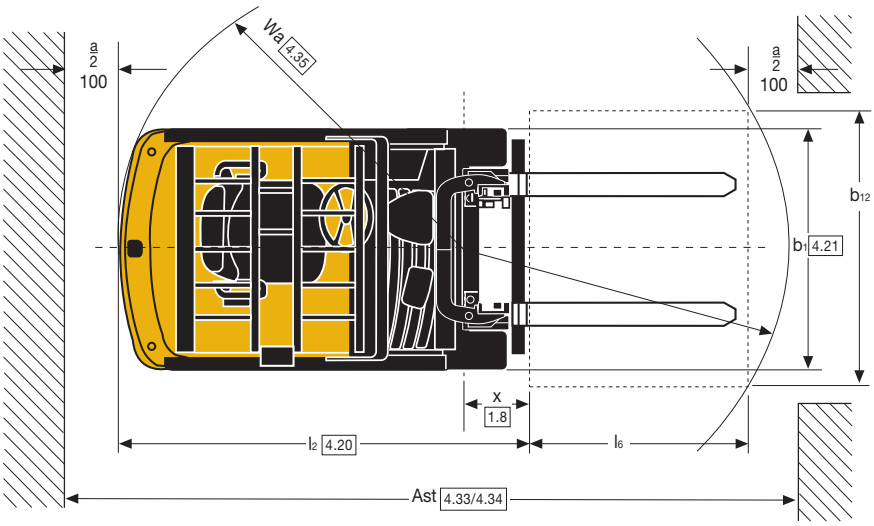

ERP 15VT Mast details and capacity ratings (kg) - superelastic tyres

Model							ERP 15 VT SWB					
Tyre size, front							18 x 7-8					
Overall width, front							1050mm					
Mast	**h1 (mm)**	**h2+s (mm)**	**h3+s (mm)**	**h4 (mm)**	**Tilt**		**Forks**			**Integral Sideshift**		
							Load Centre (kg)			**Load Centre (kg)**		
					F	**B**	**500**	**600**	**700**	**500**	**600**	**700**
2 Stage LFL Clear View	2230	140	3360	3868	5	5	1500	1300	1300	1500	1300	1240
	2580	140	3860	4368	5	5	1500	1300	1300	1500	1300	1230
	2830	140	4360	4868	5	5	1480	1280	1280	1480	1280	1220
	3180	140	4860	5368	5	5	1400	1210	1200	1400	1210	1140
2 Stage FFL Hi-Vis	2080	1505	3215	3813	5	5	1500	1300	1300	1500	1300	1250
	2330	1755	3715	4313	5	5	1500	1300	1300	1500	1300	1240
	2680	2105	4335	4913	5	5	1500	1300	1300	1500	1300	1240
3 Stage FFL Clear View	2080	1572	4600	5108	5	5	1450	1250	1250	1450	1250	1190
	2180	1672	4900	5408	5	5	1400	1210	1200	1400	1210	1140
	2330	1822	5200*	5708	5	5	1340	1160	1150	1340	1160	1090
	2430	1942	5500*	6008	5	5	1240	1110	1100	1210	1110	1040

Note: Capacities are in kg. All ratings with DIN Battery. All ratings with 1000mm forks and less load backrest.
* Tilt speed reduced to 1° per second by mechanical tilt speed restictors for mast heights 5000mm and above.

ERP 16VT SWB Mast details and capacity ratings (kg) - superelastic tyres

Model							ERP 16 VT SWB					
Tyre size, front							18 x 7-8					
Overall width, front							1050mm					
Mast	**h1 (mm)**	**h2+s (mm)**	**h3+s (mm)**	**h4 (mm)**	**Tilt**		**Forks**			**Integral Sideshift**		
							Load Centre (kg)			**Load Centre (kg)**		
					F	**B**	**500**	**600**	**700**	**500**	**600**	**700**
2 Stage LFL Clear View	2230	140	3360	3868	5	5	1600	1450	1390	1600	1450	1320
	2580	140	3860	4368	5	5	1600	1450	1380	1600	1450	1310
	2830	140	4360	4868	5	5	1580	1430	1360	1540	1410	1290
	3180	140	4860	5368	5	5	1490	1350	1280	1470	1340	1210
2 Stage LFL Hi-Vis	2180	140	3430	4006	5	5	1600	1450	1390	1600	1450	1320
	2530	140	3930	4506	5	5	1600	1450	1380	1590	1450	1310
	2780	140	4430	5006	5	5	1580	1430	1360	1530	1400	1290
	3130	140	4930	5506	5	5	1490	1350	1280	1460	1340	1210
2 Stage FFL Hi-Vis	2080	1505	3215	3813	5	5	1600	1450	1400	1600	1450	1330
	2330	1755	3715	4313	5	5	1600	1450	1390	1600	1450	1320
	2680	2105	4335	4913	5	5	1600	1450	1340	1530	1400	1280
3 Stage FFL Clear View	2080	1572	4600	5108	5	5	1540	1400	1330	1500	1370	1260
	2180	1672	4900	5408	5	5	1490	1350	1280	1460	1340	1210
	2330	1822	5200*	5708	5	5	1390	1300	1220	1360	1280	1160
	2430	1942	5500*	6008	5	5	1240	1240	1170	1220	1220	1110
3 Stage FFL Hi-Vis	2030	1455	4600	5175	5	5	1570	1420	1330	1500	1370	1270
	2130	1555	4900	5475	5	5	1510	1370	1310	1460	1340	1240
	2280	1705	5200*	5775	5	5	1460	1320	1250	1430	1310	1190
	2380	1805	5500*	6075	5	5	1350	1260	1200	1320	1250	1130

Note: Capacities are in kg. All ratings with DIN Battery. All ratings with 1000mm forks and less load backrest.
* Tilt speed reduced to 1° per second by mechanical tilt speed restictors for mast heights 5000mm and above.

ERP 16VT MWB/LWB Mast details and capacity ratings (kg) - superelastic tyres

Model							ERP 16 VT MWB						ERP 16 VT LWB					
Tyre size, front							18 x 7-8						18 x 7-8					
Overall width, front							1050mm						1050mm					
Mast	h1 (mm)	h2+s (mm)	h3+s (mm)	h4 (mm)	Tilt		Forks			Integral Sideshift			Forks			Integral Sideshift		
							Load Centre (kg)			Load Centre (kg)			Load Centre (kg)			Load Centre (kg)		
					F	B	500	600	700	500	600	700	500	600	700	500	600	700
2 Stage LFL Clear View	2230	140	3360	3868	5	5	1600	1450	1390	1600	1450	1320	1600	1450	1390	1600	1450	1320
	2580	140	3860	4368	5	5	1600	1450	1380	1600	1450	1310	1600	1450	1380	1600	1450	1310
	2830	140	4360	4868	5	5	1580	1430	1360	1580	1430	1290	1580	1430	1360	1580	1430	1290
	3180	140	4860	5368	5	5	1500	1360	1290	1500	1350	1210	1500	1360	1290	1500	1350	1220
2 Stage LFL Hi-Vis	2180	140	3430	4006	5	5	1600	1450	1390	1600	1450	1320	1600	1450	1390	1600	1450	1320
	2530	140	3930	4506	5	5	1600	1450	1380	1600	1450	1310	1600	1450	1380	1600	1450	1310
	2780	140	4430	5006	5	5	1580	1430	1370	1580	1430	1290	1580	1430	1370	1580	1430	1300
	3130	140	4930	5506	5	5	1500	1350	1290	1500	1350	1210	1500	1350	1290	1500	1350	1220
2 Stage FFL Hi-Vis	2080	1505	3215	3813	5	5	1600	1450	1400	1600	1450	1330	1600	1450	1400	1600	1450	1330
	2330	1755	3715	4313	5	5	1600	1450	1390	1600	1450	1320	1600	1450	1390	1600	1450	1320
	2680	2105	4335	4913	5	5	1600	1450	1380	1600	1450	1280	1600	1450	1380	1600	1450	1310
3 Stage FFL Clear View	2080	1572	4600	5108	5	5	1550	1400	1330	1550	1390	1260	1550	1400	1330	1550	1390	1260
	2180	1672	4900	5408	5	5	1500	1360	1290	1500	1350	1210	1500	1360	1280	1500	1340	1220
	2330	1822	5200*	5708	5	5	1420	1310	1230	1390	1290	1160	1400	1310	1230	1370	1290	1170
	2430	1942	5500*	6008	5	5	1270	1250	1180	1240	1240	1110	1260	1250	1180	1230	1230	1120
3 Stage FFL Hi-Vis	2030	1455	4600	5175	5	5	1570	1420	1360	1570	1420	1270	1570	1420	1360	1570	1420	1290
	2130	1555	4900	5475	5	5	1520	1380	1310	1520	1370	1240	1520	1380	1310	1520	1370	1240
	2280	1705	5200*	5775	5	5	1470	1330	1260	1470	1320	1190	1470	1330	1260	1470	1320	1200
	2380	1805	5500*	6075	5	5	1390	1280	1210	1360	1270	1130	1380	1280	1210	1340	1270	1150

Note: Capacities are in kg. All ratings with DIN Battery. All ratings with 1000mm forks and less load backrest. * Tilt speed reduced to 1° per second by mechanical tilt speed restictors for mast heights 5000mm and above.

ERP 18VT MWB/LWB Mast details and capacity ratings (kg) - superelastic tyres

Model							ERP 18 VT MWB						ERP 18 VT LWB					
Tyre size, front							200 / 50-10						200 / 50-10					
Overall width, front							1116mm						1116mm					
Mast	h1 (mm)	h2+s (mm)	h3+s (mm)	h4 (mm)	Tilt		Forks			Integral Sideshift			Forks			Integral Sideshift		
							Load Centre (kg)			Load Centre (kg)			Load Centre (kg)			Load Centre (kg)		
					F	B	500	600	700	500	600	700	500	600	700	500	600	700
2 Stage LFL Hi-Vis	2180	140	3430	4006	5	5	1800	1600	1550	1800	1600	1470	1800	1600	1550	1800	1600	1470
	2530	140	3930	4506	5	5	1800	1600	1540	1800	1600	1470	1800	1600	1540	1800	1600	1470
	2780	140	4430	5006	5	5	1780	1580	1530	1780	1580	1450	1780	1580	1530	1780	1580	1450
	3130	140	4930	5506	5	5	1580	1500	1440	1540	1500	1360	1580	1500	1440	1540	1500	1370
2 Stage FFL Hi-Vis	2080	1505	3215	3813	5	5	1800	1600	1560	1800	1600	1480	1800	1600	1560	1800	1600	1480
	2330	1755	3715	4313	5	5	1800	1600	1550	1800	1600	1470	1800	1600	1550	1800	1600	1470
	2680	2105	4335	4913	5	5	1800	1600	1540	1770	1600	1470	1800	1600	1540	1800	1600	1470
3 Stage FFL Hi-Vis	2030	1455	4600	5175	5	5	1770	1570	1520	1750	1570	1440	1770	1570	1520	1770	1570	1440
	2130	1555	4900	5475	5	5	1710	1520	1470	1700	1520	1390	1710	1520	1470	1710	1520	1390
	2280	1705	5200*	5775	5	5	1650	1470	1410	1650	1470	1340	1650	1470	1410	1650	1470	1340
	2380	1805	5500*	6075	5	5	1590	1410	1350	1580	1410	1280	1590	1410	1350	1580	1410	1280

Note: Capacities are in kg. All ratings with DIN Battery. All ratings with 1000mm forks and less load backrest. * Tilt speed reduced to 1° per second by mechanical tilt speed restictors for mast heights 5000mm and above.

ERP 20VT MWB/LWB mast details and capacity ratings (kg) - superelastic tyres

Model							ERP 20 VT MWB						ERP 20 VT LWB					
Tyre size, front							200 / 50-10						200 / 50-10					
Overall width, front							1116mm						1116mm					
Mast	h1 (mm)	h2+s (mm)	h3+s (mm)	h4 (mm)	Tilt		Forks			Integral Sideshift			Forks			Integral Sideshift		
							Load Centre (kg)			Load Centre (kg)			Load Centre (kg)			Load Centre (kg)		
					F	B	500	600	700	500	600	700	500	600	700	500	600	700
2 Stage LFL Hi-Vis	2180	140	3430	4006	5	5	2000	1800	1700	1990	1780	1620	2000	1800	1700	1990	1780	1620
	2530	140	3930	4506	5	5	2000	1800	1690	1980	1780	1610	2000	1800	1690	1980	1780	1610
	2780	140	4430	5006	5	5	1980	1780	1680	1940	1760	1590	1980	1780	1680	1910	1760	1590
	3130	140	4930	5506	5	5	1570	1570	1570	1520	1520	1510	1570	1570	1570	1520	1520	1500
2 Stage FFL Hi-Vis	2080	1505	3215	3813	5	5	2000	1800	1710	2000	1790	1620	2000	1800	1710	2000	1790	1620
	2330	1755	3715	4313	5	5	2000	1800	1700	1990	1790	1620	2000	1800	1700	1990	1790	1620
	2680	2105	4335	4913	5	5	2000	1800	1690	1940	1780	1610	2000	1800	1680	1910	1750	1610
3 Stage FFL Hi-Vis	2030	1455	4600	5175	5	5	1970	1770	1670	1910	1750	1580	1960	1770	1670	1880	1730	1580
	2130	1555	4900	5475	5	5	1910	1720	1620	1870	1690	1540	1900	1710	1610	1840	1690	1530
	2280	1705	5200*	5775	5	5	1850	1660	1560	1820	1640	1480	1790	1650	1550	1760	1620	1470
	2380	1805	5500*	6075	5	5	1710	1600	1500	1680	1580	1430	1640	1590	1490	1610	1560	1410

Note: Capacities are in kg. All ratings with DIN Battery. All ratings with 1000mm forks and less load backrest. * Tilt speed reduced to 1° per second by mechanical tilt speed restictors for mast heights 5000mm and above.

VT series

Models: 15VT SWB, 16VT SWB/MWB/LWB, 18VT MWB/LWB, 20VT MWB/LWB

AC Technology
Yale AC technology Class H traction motors are suitable for the most arduous applications. Smooth forward and reverse directional changes providing seamless driving action. In the high-performance or 'HiP' setting, AC technology provides increased speed and acceleration, even when fully laden, and increased speed on grade. As well as improving performance, AC technology reduces maintenance and allows service intervals of 1000 hours for most components.

Brakes
The truck is equipped with automatic park brake and oil immersed brakes. Automatic YaleStop™ park brake: spring applied, electro magnetically released park brakes are mounted at the end of both motors. The park brake is automatically set by the control system, so that the brake is always set whenever the truck is not moving, and no traction has been requested. Moreover the park brake provides controllability on ramp applications.

Steering
A 12 KW AC motor drives a pump which provides oil pressure for the hydraulic pump and for steering, eliminating the need for a separate steering motor and pump. The steering column is infinitely adjustable in a range of 26°. During cornering the speed of the drive motors is continuously adjusted independently by the traction controller ensuring smooth operation. Twin steer tyres provide long tyre life, low power consumption and increased stability.

'eLo' and 'HiP' Settings
Yale VT trucks feature an 'eLo' energy saving setting (accessible via the overhead display with service password), which provides exceptional energy efficient performance for when you require continuous operation over longer periods without recharging the battery. You can choose the 'HiP' high performance setting for higher top speeds and acceleration for the most demanding applications.

Performance modes
Performance of the truck can be tailored via the enhanced overhead display, with 4 performance modes available to suit the requirements of the application or the preferences of the driver. For maximum speed and acceleration, choose mode 4, or for more delicate maneuvering and extended battery life, mode 1 is ideal.

Your service technician can alter the top speed and acceleration of mode 4, with modes 1, 2 and 3 being automatically adjusted as percentages of setting 4.

Improved ergonomics
The VT is designed for optimum operator comfort.

The operator is seated in an ergonomically designed position for maximum safety, comfort, visibility and ease of operation. The truck features a very low step height, generous floor and storage space, standard grab handle for ease of entry and standard reverse grab handle. The full suspension seat has 80mm of adjustment. A swivel seat option for a superior reverse driving position is available. Both the mini-lever module and the manual levers have an integrated direction switch. Clear footwell allows easy access from both sides.

Masts
A full range of Yale Hi-Vis™ 2 stage LFL and 2 and 3 stage FFL masts are available. Yale Hi-Vis™ masts are designed for maximum visibility, with widely spaced channels, lift chains and

VT series

Models: 15VT SWB, 16VT SWB/MWB/LWB, 18VT MWB/LWB, 20VT MWB/LWB

main lift cylinders. The new Yale Clear View™ Mast with class-leading visibility is offered on the 1.5T and 1.6T capacities.

Battery
Choice of 2 battery sizes: DIN and BS.

Choice of 3 wheelbases: Depending on the capacity, there is a choice of Short Wheelbase (SWB), Medium Wheelbase (MWB), and Long Wheelbase (LWB). The LWB versions provide extra battery space and longer shift life. SWB versions offer improved maneuverability and reduced stacking aisle dimensions. Battery discharge indicator and lift interrupt are standard on all trucks.

Low lifetime costs
Lower maintenance costs as a result of less maintenance by oil immersed brakes, electric park brake, and CANbus and AC technology. Transmission is sealed for life, eliminating the need for service. LED light packages are offered as an option.

1000 hours service interval for most components.

Auto Regen Braking optimises the shift life of the battery and contributes to an increase in the life of parts.

Options

- AccuTouch™ mini-levers
- Foot directional control
- Lighting kits, including LED lights
- Reverse alarm
- Integrated sideshift
- DIN and BS battery
- Side battery extraction

NACCO Materials Handling Limited
trading as **Yale Europe Materials Handling**
Centennial House, Frimley Business Park,
Frimley, Surrey GU16 7SG, United Kingdom.
Tel: +44 (0) 1276 538500 Fax: +44 (0) 1276 538559

www.yale-forklifts.eu

Country of Registration: England. Company Registration Number: 02636775

Safety. This truck conforms to the current EU requirements. Specification is subject to change without notice.

Yale, VERACITOR and are registered trademarks. "PEOPLE, PRODUCTS, PRODUCTIVITY", PREMIER, Hi-Vis, and CSS are trademarks in the United States and certain other jurisdictions. MATERIALS HANDLING CENTRAL and MATERIAL HANDLING CENTRAL are Service Marks in the United States and certain other jurisdictions. is a Registered Copyright. © Yale Europe Materials Handling 2014. All rights reserved.

Truck shown with optional equipment

Printed in The United Kingdom (0214.50HG) EN
Publication part no. 258725897 Rev.05